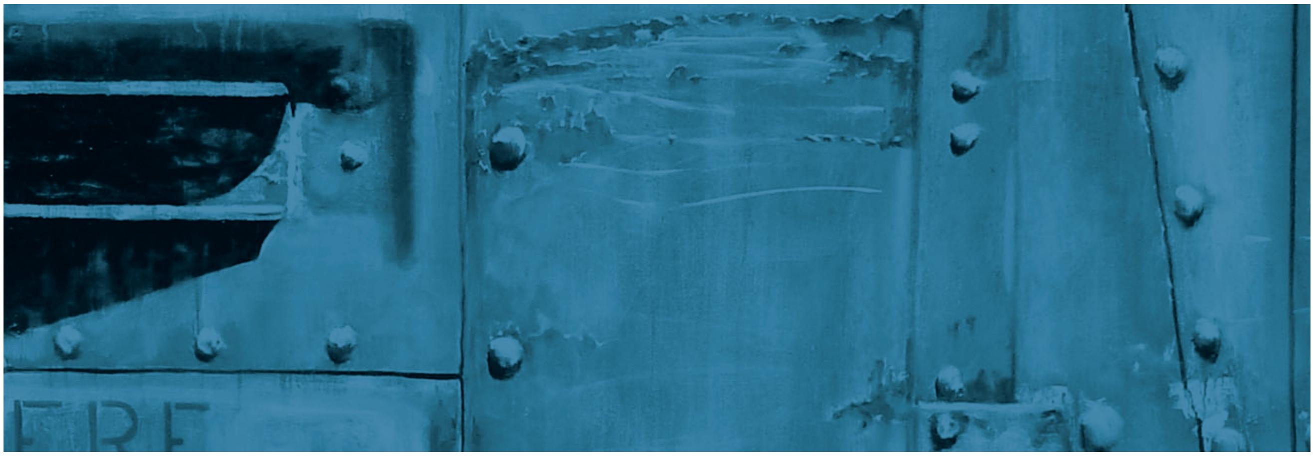

Green Hill School
Recreation Building Replacement

Stormwater Report

February 25, 2021 | Third Party Stormwater Review

kpff
Consulting
Engineers

Stormwater Report

February 25, 2021 | Third Party Stormwater Review

Prepared for:
Washington State Department of
Children, Youth, and Families

Prepared by:
KPFF Consulting Engineers
1601 Fifth Avenue, Suite 1600
Seattle, WA 98101
(206) 622-5822
KPFF Job No. 1800416

Project Engineer: Brady Retzlaff
Principal in Charge: Martin F. Chase, PE

MARTIN F. CHASE
28482

This page intentionally left blank

Table of Contents

List of Figures and Tables

Appendices

This page intentionally left blank

1. Project Overview

The Green Hill School Recreation Building project site is located at the Green Hill School (GHS) Campus at 375 Southwest 11th Street in Chehalis, Washington. The project site consists of 7.89 acres located entirely within the GHS campus, and is bounded by existing campus improvements on all sides. The campus itself is bounded by a Burlington Northern Santa Fe right-of-way to the northeast, Southwest Parkland Drive to the southeast, Interstate-5 to the southwest, and a wetland to the northwest. The tax parcel number for the site is 005871071121.

EXISTING CONDITIONS

Existing site land cover is mostly lawn, with several paved pathways meandering through the project site. No buildings are located within the limits of the proposed project. Existing topography is relatively flat for the majority of the site, however the southern quadrant slopes gradually upward toward an existing concrete path that wraps the project's perimeter. See Figure 1-1 Vicinity Map below.

Subsurface conditions consist of a layer of topsoil and sod, overlying a fill layer that varies from two feet to eight feet in thickness. Below the fill material, native soils consist of medium-dense to very-dense clayey gravels with sand and silty sand. Groundwater in the project vicinity is relatively shallow, estimated at approximately four feet below grade.

See Appendix A for a Pre-Development Land Cover Map and Appendix B for full Geotechnical Report completed by Hart Crowser, Inc. June 16, 2020.

Figure 1-1: Vicinity Map

The existing GHS drainage system collects surface water from all areas of the campus, and conveys runoff through a mixture of pumped and gravity systems to the northwest boundary of campus. Stormwater is discharged from this northwest boundary via a gravity outfall pipe to a wetland located northwest of the campus, between the campus boundary and Interstate-5. Stormwater not retained in the wetland discharges to the northwest, entering Dillenbaugh Creek and ultimately the Chehalis River.

PROPOSED CONDITIONS

Proposed improvements include a one-story recreation building, a pedestrian gathering plaza, several athletic fields, and a network of pathways providing connectivity between site elements and to the existing campus. Formal planting areas and trees are interspersed between proposed hardscapes, and a channel of bioretention cells runs north-south near the center of the proposed site improvements.

Wherever possible, improvements will be graded to sheet flow to the central bioretention facility. Where surface conveyance is not feasible, catch basins or perforated underdrains will be used to collect runoff to be piped to the facility. Downstream of the bioretention facility, runoff is discharged to the existing campus drainage system, which ultimately conveys runoff to the off-site wetland that borders the GHS campus to the north and west. Several site areas cannot be drained to the bioretention facility via gravity, and are discharged separately to existing storm drainage infrastructure, bypassing site detention. Proposed improvements will generally mimic existing flow characteristics, maintaining grassy land cover and using sheet flow to drain to collection facilities wherever possible.

See Appendix A for Post-Development Land Cover Map.

2. Applicability of Minimum Requirements

The City of Chehalis has adopted the Washington State Department of Ecology (DOE) 2019 Stormwater Management Manual for Western Washington (SWMMWW). This report and the proposed stormwater infrastructure have been developed and designed in accordance with the SWMMWW and the current City of Chehalis Municipal Code.

While the project includes several independent connections to the existing campus drainage system, the discharge from all connection points combines within one-quarter mile downstream, when measured along the shortest flowpath. As such, the areas tributary to each connection point are analyzed as a single Threshold Discharge Area, and project area and land cover can be analyzed for the project as a whole. See Appendix A for a Threshold Discharge Area Map illustrating this concept.

As the existing project site has less than 35% hard surface coverage, it is considered a new development project by the SWMMWW. Table 2-1 below summarizes the Pre- and Post-Developed land cover quantities used for determining applicable minimum requirements. See Appendix A for Pre- and Post-Development Land Cover Maps illustrating these quantities.

Table 2-1: Existing and Proposed Land Cover

Existing and Proposed Land Cover	Surface Area	% Total Area
Existing Hard Surface	0.35 AC	4.4%
Existing Pervious Surface	7.54 AC	95.6%
New Plus Replaced Hard Surface	2.08 AC	26.4%
New Plus Replaced Pervious Surface	5.81 AC	73.6%
Total Project Area	7.89 AC	100.00%

The new plus replaced hard surface proposed by the project exceeds 5,000 square feet, therefore the project is required to comply with Minimum Requirements No. 1-9. Table 2-2 below summarizes specific applicability of each Minimum Requirement to this project.

Table 2-2: Applicability of Minimum Requirements

Minimum Requirement	SWMMWW Section	Remarks
MR1 – Preparation of Stormwater Site Plans	Volume 1 Section 3.4.1	Followed in accordance with City of Chehalis and SWMMWW requirements.
MR2 – Construction Stormwater Pollution Prevention Plan	Volume 1 Section 3.4.2	Followed in accordance with City of Chehalis and SWMMWW requirements.
MR3 – Source Control of Pollution	Volume 1 Section 3.4.3	Not applicable. Project does not include point sources of pollutants.
MR4 – Preservation of Natural Drainage Systems and Outfalls	Volume 1 Section 3.4.4	Followed in accordance with City of Chehalis and SWMMWW requirements.
MR5 – On-site Stormwater Management	Volume 1 Section 3.4.5	Followed in accordance with City of Chehalis and SWMMWW requirements.
MR6 – Runoff Treatment	Volume 1 Section 3.4.6	Followed in accordance with City of Chehalis and SWMMWW requirements.
MR7 – Flow Control	Volume 1 Section 3.4.7	Followed in accordance with specific direction provided by the City of Chehalis City Engineer.
MR8 – Wetlands Protection	Volume 1 Section 3.4.8	Followed in accordance with specific direction provided by the City of Chehalis City Engineer.
MR9 – Operation and Maintenance	Volume 1 Section 3.4.9	Followed in accordance with City of Chehalis and SWMMWW requirements.

3. Compliance with Minimum Requirements

As noted above, the project results in more than 5,000 square feet of new plus replaced hard surface area, and is therefore required to comply with Minimum Requirements No. 1-9. Specific applicability and project compliance with each minimum requirement is summarized below.

MINIMUM REQUIREMENT 1 – PREPARATION OF STORMWATER SITE PLANS

Stormwater plans have been developed as a part of the project construction documents to document the proposed stormwater design, and demonstrate code compliance to the City of Chehalis. The plans and corresponding design are based on analysis of the existing downstream campus drainage system, site grading and infrastructure constraints, recommendations from the project geotechnical engineer, and the applicable Minimum Requirement described herein.

Project Stormwater Plans have been included for reference in Appendix C.

MINIMUM REQUIREMENT 2 – CONSTRUCTION STORMWATER POLLUTION PREVENTION PLAN (CSWPPP)

A Construction Stormwater Pollution Prevention Plan (CSWPPP) has been developed for this Project and included as Plan sheet C200 in Appendix C for reference. The CSWPPP demonstrates compliance with the 13 Elements described in the SWMMWW Volume 1 Section 3.4.2.

Plan sheet C200 details erosion and sediment control measures that will be installed to prevent sediment-laden runoff from entering adjacent right-of-ways, surface waters, and storm and sewer systems. Runoff will be collected and conveyed via temporary conveyance swales to minimize sheet flow and direct runoff away from exposed soils. Before discharge to the existing storm system, runoff will be routed through sedimentation tanks to ensure discharge compliance. Refer to Appendix D for sedimentation volume calculations. Inlet protection will be installed in existing catch basins to protect the existing system.

A SWPPP narrative will be provided to the contractor prior to the start of project construction.

MINIMUM REQUIREMENT 3 – SOURCE CONTROL OF POLLUTION

The proposed project site does not have any specific sources of pollution such as fuel tanks, chemical storage, or vehicle maintenance yards. No specific source control Best Management Practices (BMPs) or spill prevention plans are proposed.

MINIMUM REQUIREMENT 4 – PRESERVATION OF NATURAL DRAINAGE SYSTEMS AND OUTFALLS

Existing stormwater runoff from the project site is conveyed via sheet flow to a series of catch basins and routed to the off-site wetland located west of the GHS campus via the existing campus drainage system.

Where building and site improvements require removal of existing drainage systems, new infrastructure is proposed to preserve existing drainage patterns. Sheet flow is used wherever possible to convey runoff to the new bioretention facility, which discharges downstream to the existing campus drainage system and outfall.

MINIMUM REQUIREMENT 5 – ON-SITE STORMWATER MANAGEMENT

As a 7.89 acre project located within the City of Chehalis city limits, the project proposes to comply with Minimum Requirement No. 5 via The List Approach described in the SWMMWW Volume 1 Section 3.4.5.

The project will satisfy Minimum Requirement No. 5 using BMP T7.30: Bioretention, selected from List #2 provided in Table I-3.2 of the SWMMWW. The facility is sized so as to have a minimum horizontal projected surface area below the overflow that is at least 5% of the hard surface area draining to the facility, as required by the SWMMWW. Table 3-1 below provides a summary of facility sizing for On-Site Stormwater Management Compliance. Refer to Section 4 for more information related to the design of the bioretention facility.

Table 3-1: Bioretention Sizing for On-Site List Approach

Tributary Hardscape	5% of Tributary Impervious Surface	Design Area At Riser Crest Elevation	Design Area At Riser Crest Elevation Adjusted for 10% Construction Tolerance
1.75 AC	0.09 AC	0.14 AC	0.12 AC

Specific infeasibility criteria for the unused On-Site Stormwater Management BMPs ranked higher than BMP T7.30: Bioretention in Section 3.4.5, Table I-3.2, List #2 are provided in Tables 3-2 and 3-3, below.

Table 3-2: OSM BMP Infeasibility – Roof Surfaces

List #2: Roof Surfaces		
BMP	**Feasibility**	**Justification**
BMP T5.30: Full Dispersion	Infeasible	Spatial constraints created by the hardscapes proposed by the project, and the active recreational use of all disturbed landscaped areas does not leave adequate area to provide the required vegetated flow path for Full Dispersion.
BMP T5.10A: Downspout Full Infiltration	Infeasible	The project geotechnical engineer has recommended that infiltration not be used, based on the high seasonal groundwater table in the project vicinity.
BMP T7.30: Bioretention	Feasible	N/A – BMP Used

Table 3-3: OSM BMP Infeasibility – Non-Roof Surfaces

List #2: Non-Roof Surfaces		
BMP	**Feasibility**	**Justification**
BMP T5.30: Full Dispersion	Infeasible	Spatial constraints created by the hardscapes proposed by the project, and the active recreational use of all disturbed landscaped areas does not leave adequate area to provide the required vegetated flow path for Full Dispersion.
BMP T5.15: Permeable Pavements	Infeasible	The project geotechnical engineer has recommended that infiltration not be used, based on the high seasonal groundwater table in the project vicinity.
BMP T7.30: Bioretention	Feasible	N/A – BMP Used

The proposed landscape design will include soil sections compliant with BMP T5.13: Post-Construction Soil Quality and Depth for all new and replaced pervious surfaces proposed by the project.

MINIMUM REQUIREMENT 6 – RUNOFF TREATMENT

The project results in more than 5,000 square feet of new plus replaced pollution generating hard surfaces (PGHS), and so is required to provide treatment for runoff from all pollution generating surfaces. The project discharges indirectly to Dillenbaugh Creek, which is not designated in Volume 3, Appendix A as a Basic Treatment Receiving Water. The project must therefore provide treatment via an Enhanced Treatment BMP selected from the options listed in Volume 3, Section 1.2 of the SWMMWW.

Since BMP T7.30: Bioretention is listed as an Enhanced Treatment BMP, the central bioretention facility proposed by the project is designed to provide runoff treatment in addition to its function as an On-Site Management facility.

Runoff from pollution generating surfaces proposed by the project will be routed to the bioretention facility for treatment wherever possible. Since runoff from pollution generating and non-pollution generating surfaces will be collected together within the bioretention facility, all runoff tributary to the facility is conservatively assumed to be pollution generating.

A small amount of pollution generating hard surface cannot feasibly be routed to the bioretention facility, and will therefore be treated as bypass. However, the volume of runoff that will be treated by the bioretention facility is as such so that more than 91% of the polluted runoff generated by the water quality design storm will be treated by the facility, as required by the SWMMWW.

See Appendix E for Runoff Treatment Calculations supporting the above analysis.

MINIMUM REQUIREMENT 7 – FLOW CONTROL

Through coordination with the City of Chehalis, the project team has established the following flow control requirement in order to minimize impact on the downstream storm drainage system and avoid adverse impacts to the wetland that indirectly receives runoff from the project site:

The 100-year peak flow from the proposed project site shall not exceed the 100-year peak flow from the existing project site.

Though the improvements proposed by the project will result in a net increase in impervious surface coverage, surface ponding provided in the bioretention facility provides adequate detention storage to comply with this requirement. Refer to Section 1 “Project Overview” on page 1 for description of existing land cover.

See Section 4 for more information regarding the design of the bioretention facility, and Appendix F for Flow Control calculations demonstrating compliance with the above requirement.

MINIMUM REQUIREMENT 8 – WETLANDS PROTECTION

As described above**,** the project indirectly discharges stormwater to a wetland located west of the GHS campus through the existing campus storm drainage system and outfall. The relationship between the project site, wetland, and the existing outfall is illustrated in the National Wetland Index Map included in Appendix G. Compliance with the three elements of wetland protection described in Volume 1, Section 3.4.8 of the SWMMWW is described below.

General Protection: The project site discharges *indirectly* to an off-site wetland located west of the GHS campus through the existing campus drainage system. As such the project is not located within the wetland or its buffer, and the requirements outlined in Volume 1, Appendix C, Section 2 of the SWMMWW are satisfied by limiting project activity to the limits of disturbance shown in the project plans.

Protection from Pollutants: The project will comply with Minimum Requirements No. 2, 3, 5, and 6 as described above, effectively protecting the downstream wetland from pollutants produced by the project site.

Wetland Hydroperiod Protection: Through coordination with the City of Chehalis, the flow control requirement Described in Minimum Requirement No. 7 was developed to minimize adverse hydrologic impacts on the downstream wetland as a result of the proposed development. Refer to Minimum Requirement No. 7 for information on compliance with this standard.

As this requirement was coordinated as the project’s only flow control requirement, the Wetland Monitoring and Site Discharge Monitoring requirements outlined in Volume 1, Appendix C, Section 4 are not applicable to this development.

MINIMUM REQUIREMENT 9 – OPERATION AND MAINTENANCE

See Appendix H for BMP operations and maintenance standards.

4. Bioretention Facility

As described above, the centrally located bioretention facility is designed to satisfy Minimum Requirements for On-Site Stormwater Management, Runoff Treatment, Flow Control, and Wetland Protection, and as such is of critical importance to the project's stormwater design.

The facility generally consists of five bioretention cells all set at the same elevation, with low-flow connectivity (for runoff percolating through the soil media) via a single continuous underdrain, and high-flow connectivity (for runoff ponding at the bioretention cell surface) via culverts set near the bottom elevation of the facility.

The culverts providing high-flow connectivity between bioretention cells are generally set with their upstream invert elevation two inches above the bottom elevation of the facility, and their downstream invert elevation one inch above the bottom elevation of the facility. This configuration allows for positive north-to-south conveyance despite the facility's flat bottom, and will result in more frequent shallow ponding in each individual cell. Since the design ponding depth of 12 inches significantly exceeds the invert elevation of the culverts, the five cells will pond in parallel at the 100-year storm event on which the flow control design is based. As such, the five cells are hydraulically analyzed as a single, flat-bottomed detention facility.

Due to the high groundwater table present in the project vicinity, the facility is designed to be non-infiltrating, and is lined with an impermeable membrane to prevent continuous saturation of the facility with groundwater from compromising its hydraulic processes.

At the downstream end of the continuous underdrain, a flow control structure restricts the discharge of ponded stormwater so as to satisfy the project's flow control requirement. The crest of riser housed in the flow control structure is set 12 inches above the bottom elevation of the bioretention facility, which correspondingly sets the maximum facility ponding depth. A redundant overflow structure is set at the same elevation as the riser crest in each upstream cell so as to reduce reliance on the culverts that connect individual cells.

The facility is generally designed to conform to the design guidelines outlined in the SWMMWW for BMP T7.30: Bioretention.

5. Conveyance Analysis

The project's storm drainage system has been designed to provide adequate capacity to convey runoff generated by the 25-year storm event. Peak flow rates have been calculated for each surface collection basin, and compared with the capacity of the flattest run of the downstream conveyance system.

The calculations associated with this analysis are summarized in Appendix I. Since the capacity of each pipe exceeds the 25-year peak flow generated by the tributary basin, the conveyance system has been adequately designed.

6. Off-Site Analysis

KPFF visited the Green Hill School campus on January 20th, 2021 to perform an off-site analysis per Volume One, Section 3.5.3 of the SWMMWW. The campus drainage system was generally observed to be functioning properly, and no conveyance, erosion, or water quality issues were identified downstream of the project site. Campus stormwater could be observed actively flowing through structures in the direction expected, indicating a properly functioning conveyance system. Saturated conditions in the off-site wetland prevented access for analysis of the existing outfall. However, the first structure upstream of the outfall was accessed, and stormwater could be observed flowing through the structure toward the outfall as anticipated.

One existing structure near the southwest edge of the proposed development was found to be full of water, and conveyance through the structure could not be identified. Since positive drainage was observed upstream and downstream of the structure in question, the issue is thought to be a back-sloped pipe downstream of the water-filled structure. The project will intercept the existing storm drain upstream of this structure, placing new pipe to reroute the line to a downstream connection point where positive conveyance could be observed.

Photos and summary exhibit of the off-site analysis are included in Appendix J.

Appendix A

Site Maps

Feb 25, 2021 – 1:58pm LisaC \\kpff\dfs\Civil\1800001-1800999\1800416 GHS Recreation Building Replacement\PROJECT DOCUMENTS\Storm Drainage\Site Maps\2021-02-23 Areas\GHSRec_F
Xref Filename: \ X-GHS-SP \ X-GHS-BLDG \ X-GHS-SV \ X-GHS-GD \ TTB\

PRE-DEVELOPMENT LAND COVER

SURFACE TYPE	AREA (AC)
IMPERVIOUS SURFACE	0.35
PERVIOUS SURFACE	7.54
TOTAL PROJECT AREA	7.89

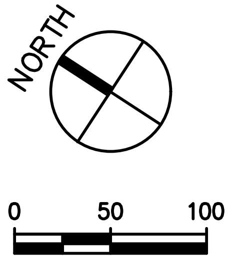

NOT FOR CONSTRUCTION

DLR GROUP
GREEN HILL SCHOOL RECREATION BUILDING
CHEHALIS, WA

DRAWN BY: LRC
DATE: 2021-02-26

POST–DEVELOPMENT LAND COVER

SURFACE TYPE	AREA (AC)
IMPERVIOUS SURFACE TRIBUTARY TO BIORETENTION	1.75
PERVIOUS SURFACE TRIBUTARY TO BIORETENTION	5.52
IMPERVIOUS SURFACE BYPASSING BIORETENTION	0.33
BIORETENTION	0.29
TOTAL PROJECT AREA	7.89

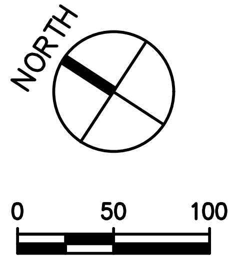

NOT FOR CONSTRUCTION

Feb 25, 2021 – 5:14pm LisaC \\kpff\dfs\Civil\1800001-1800999\1800416 GHS Recreation Building Replacement\PROJECT DOCUMENTS\Storm Drainage\Site Maps\2021-02-23 Areas\GHSRec_F
Xref Filename: \ X-GHS-SP \ X-GHS-BLDG \ X-GHS-SV \ X-GHS-GD \ TTB\

DRAWN BY: LRC
DATE: 2021-02-26

kpff

DLR GROUP
GREEN HILL SCHOOL RECREATION BUILDING
CHEHALIS, WA

THRESHOLD DISCHARGE AREA MAP

ABBREVIATIONS

EX	EXISTING
POC	POINT OF CONNECTION
TDA	THRESHOLD DISCHARGE AREA

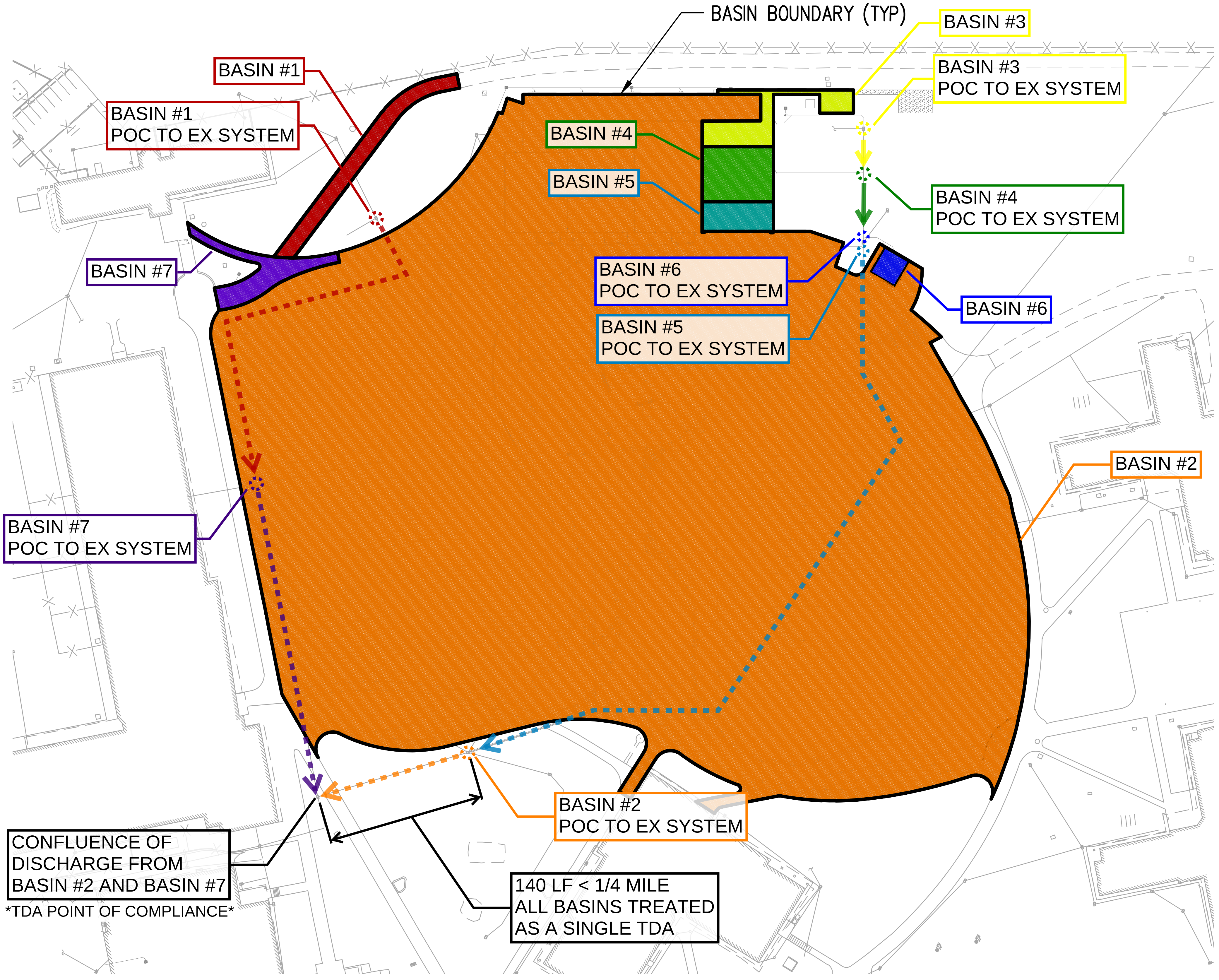

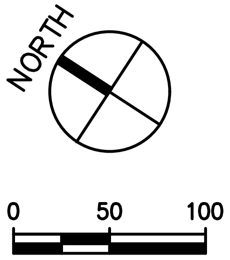

NOT FOR CONSTRUCTION

DRAWN BY: LRC
DATE: 2021-02-26

DLR GROUP
GREEN HILL SCHOOL RECREATION BUILDING
CHEHALIS, WA

Feb 24, 2021 - 8:03am LisaC \\kpff\dfs\Civil\1800001-1800999\1800416 GHS Recreation Building Replacement\PROJECT DOCUMENTS\Storm Drainage\Site Maps\2021-02-23 Areas\GHSRec_T
Xref Filename: \ X-GHS-SP \ X-GHS-BLDG \ X-GHS-SV \ X-GHS-GD \ X-GHS-SD \ TTB\

Appendix B

Geotechnical Report

Geotechnical Report

Green Hill School Athletic Facility

Chehalis, Washington

Prepared for

DRL Group

June 16, 2020
19461-00

HARTCROWSER

HARTCROWSER

www.hartcrowser.com

Geotechnical Report

Green Hill School Athletic Facility

Chehalis, Washington

Prepared for

DRL Group

June 16, 2020

19461-00

Prepared by

Hart Crowser, Inc.

Luke Kevan
Project, Geotechnical Engineer

GARRY E. HORVITZ
19478

6/16/2020

Garry Horvitz, PE, LEG
Geotechnical Engineer
Vice President

3131 Elliott Avenue, Suite 600
Seattle, Washington 98121
206.324.9530

Contents

TABLES

FIGURES

APPENDIX A

Field Explorations

APPENDIX B

Laboratory Testing

Geotechnical Report

Green Hill School Athletic Facility

Chehalis, Washington

1.0 INTRODUCTION

Hart Crowser is pleased to present this report to DRL Group summarizing the results of our field explorations and engineering analysis completed for the proposed athletic facility at Green Hill School (GHS) in Chehalis, Washington. Our work was completed in general accordance with our agreement dated February 28, 2019 and the consulting services amendment dated February 13, 2020.

The project consists of development of a playfield as well as a building for Wellness and Activities, which will include an indoor pool and other amenities. The Building is anticipated to be a single “tall” story with plan dimensions of about 130 by 300 feet. We understand the building will be steel framed with masonry façade and will have maximum column loads and wall loads of up to 175 kips and 3 kips per foot, respectively. We understand that the planned finished floor elevation is 188.67 feet (NAVD 88).

This report contains the results of our analysis and provides recommendations for design and construction of the proposed development. The first section of this report provides an overview of the project information discussed in the text. The main body of the report presents our geotechnical engineering findings and recommendations in detail.

Figures are presented at the end of the text. The location of the site is shown on Figure 1. The site exploration plan is shown on Figure 2. Supporting information is provided in the appendices. Appendix A contains the logs of our soil borings and test pits (TP). Appendix B contains the results of our laboratory testing.

2.0 SCOPE OF SERVICES

The purpose of our work was to evaluate subsurface conditions at the site and to develop geotechnical design recommendations and construction guidelines for the proposed project. Our scope of work was outlined in our proposal dated April 22, 2020, and we generally completed the following tasks.

- Reviewed relevant, readily available geologic maps that cover the site vicinity to evaluate geologic hazards and regional soil mapping.
- Conducted field explorations consisting of the following:
  - Advancing three soil borings, designated B-1, B-2, and B-3, to depths of 35 feet, 50 feet, and 25 feet below the existing ground surface (bgs), respectively.
  - Installing open standpipe monitoring wells in two of the soil borings (B-1 and B-3).
  - Excavating eight test pits to depths ranging between 7 and 14 feet bgs.

- Conducted engineering analysis to develop geotechnical design recommendations for foundations, slabs, pavements, infiltration and seismic design criteria.
- Prepared this report which contains the following information:
  - A site plan showing the locations of the explorations;
  - Logs of the borings and test pits, including the results of all field and lab testing;
  - Summary of subsurface conditions, including the impacts of those conditions on project development;
  - Estimates of the drainage characteristics of the near-surface soils;
  - Seismic design parameters per UBC;
  - Assessment of seismic hazards at the site, including the potential for seismically induced liquefaction and anticipated associated subsidence;
  - Recommendations for design of shallow foundations for the building, including allowable bearing pressures, minimum footing dimension, depth of burial, and minimum widths;
  - Estimates of total and differential settlement;
  - Assessment of general infiltration characteristics of the near-surface site soils based on grain size characteristics;
  - Recommendations for building drainage provisions and drainage considerations of a below-grade pool structure;
  - Recommendations for selection, placement, and compaction of structural fill, including an assessment of the suitability of on-site soils for reuse as fill;
  - Geotechnical recommendations for design of utilities; and
  - Geotechnical recommendations for design of pavements;
- Provided geotechnical project management and support services.

3.0 SITE CONDITIONS

3.1 Surface Conditions

The proposed project area consists of a relatively flat open area within the larger GHS campus that contains a soccer field, baseball diamond, and a few paved paths. The site of the proposed building is roughly coincident with the soccer field currently on the site, while the other features of the proposed development roughly occupy the remainder of the open space to the west of the soccer field. The open area is generally flanked by one- to two-story buildings, which occupy most of the remainder of the GHS campus.

Site grades are relatively level, but somewhat irregular, within the proposed project area. In approximately area of the proposed building (current soccer field), elevations range from approximately 190 feet above mean sea level (MSL) along the east side to approximately 189 feet MSL along the west side. Elevations within the remainder of the project site generally range from approximately 186 feet near the north end to 193 feet MSL near the south end. However, localized areas of higher or lower elevations are present.

3.2 Geologic and Soil Mapping

3.2.1 Geologic Mapping

The geology of the site is mapped as “Modified Land” (fill), described as rubble of northern sourced cobbles and sand, locally sourced and redistributed to modify topography (Sadowski et al. 2018). Underlying the modified land deposits, the mapping indicates the GHS campus is underlain by older alluvial (terrace) deposits to the east and fine-grained alluvial deposits to the west, with the contact between the two trending roughly northwest-southeast and cutting through roughly the center of the GHS campus. The more recent deposits are mapped as overlying the Eocene Lincoln Creek Formation at depth.

The older alluvial deposits are described as terrace deposits consisting of pebbles, cobbles, sand, silt, clay, and boulders in varying amounts. They are described as light tannish gray to dark brown, fresh to lightly weathered, except where streams have incorporated older deposits; typically, well rounded and well sorted, and not compacted or cemented (Sadowski et al. 2018). The fine-grained alluvial deposits are described as overbank material generally consisting of tannish gray to light brown, fresh to lightly weathered, not compacted or cemented, silt to very fine sand. The fine-grained alluvial deposits are described as generally thin and underlain by recent alluvial deposits ranging from gravel to clay. The Lincoln Creek formation is described as moderately to poorly lithified siltstone to very fine sandstone.

3.2.2 Soils Mapping

Soils within the project area mapped primarily as Lacamas silt loam, 0 to 3 percent slopes (USDA 2020). The Lacamas soils are described as silt loam to 17 inches bgs, silty clay to 27 inches bgs, and clay to 60 inches bgs occurring on flood plains and terraces. They are poorly drained with an estimated depth to water of approximately 12 to 18 inches and very low hydraulic conductivity (approximately 0 inches per hour) in the most restrictive layer.

3.3 Previous Studies

Previous explorations completed toward the west end of the GHS campus (nearby, but outside of the current project area) generally encountered mixed fill overlying native clay, sand, silty sand, gravel, and silty gravel (Creative Engineering Options 2006; GeoEngineers 2011). The fill is generally described as loose to medium dense/soft to medium stiff sand, silty sand, and clay, as well as occasional debris (brick fragments, concrete/asphalt rubble, and charcoal) extending to approximately 4 to 10 feet bgs. The native soils are generally described as up to approximately 6 feet of medium stiff lean to fat clay overlying loose to very dense sand, silty sand, gravel, and silty gravel. The granular soils extended to the base of the explorations, approximately 36.5 feet bgs. Groundwater was encountered in these explorations between approximately 6 and 11 feet bgs.

3.4 Subsurface Conditions

3.4.1 General

Soil conditions interpreted from geologic maps, previous subsurface studies at the site, and our explorations, in conjunction with soil properties inferred from field observations and laboratory tests, formed the basis for the conclusions and recommendations provided in this report.

We completed field explorations at the site by advancing three borings (designated B-1 through B-3) to depths between approximately 26.5 and 51.5 feet bgs. In addition to the borings, we excavated eight test pits (designated TP-1 through TP-8) to depths between approximately 6 and 14 feet bgs. Two groundwater monitoring wells, MW-1 and MW-2, were installed at the locations of B-1 and B-3, respectively. The locations of the explorations are shown on Figure 2.

Appendix A describes our field exploration procedures and presents field data and logs. Appendix B describes our laboratory testing procedures and results.

Based on the results of borings, test pits, and visual field and laboratory observations of the site soils, the site is generally blanketed by approximately 5 to 8 inches of topsoil and sod. Deposits of fill, and/or possible fill, were observed in all our explorations and extended between approximately 2.5 and 8 feet bgs. Underlying the surficial fill and clay soils, native soils generally consisted of medium dense to very dense clayey gravels with sand and silty sand extending to approximately 51.5 feet bgs, the deepest depth explored.

Detailed descriptions of the soils encountered are provided below.

3.4.2 Topsoil

We encountered topsoil/sod in all our explorations. The thickness of the topsoil ranged from approximately 5-inches thick in TP-1 to approximately 8-inches thick in TP-4, TP-5, and TP-7.

3.4.3 Surficial Fill and Clay Soils

All our explorations encountered material interpreted as fill and/or possible fill below the topsoil. Immediately below the topsoil, the fill materials consisted of generally loose to occasionally medium dense sand, sand with silt, silty sand, poorly graded gravel with sand, poorly graded gravel with silt and sand, and silty/clayey gravel. The fill contained debris including brick, concrete, rebar, wire, plastic, and charcoal. In TP-6, the debris included large concrete blocks that were many feet in length. In TP-5, the fill immediately below the topsoil consisted of clay with sand that contained shattered glass and charcoal, and in TP-8 we encountered minor brick debris in lean clay at approximately 8 feet bgs.

In borings B-1 through B-3, and test pits TP-1, TP-2, TP-3, and TP-5, we encountered fine-grained soils interpreted as possible fill based on the deep debris found in TP-8 and softer soil horizons found at depth in the fine-grained soils. In TP-7 the fine-grained material was interpreted as native because of a buried topsoil mat observed at approximately 5 feet above the clay.

The fine-grained soils consisted of lean to fat clay. Standard penetration test (SPT) N-values within the clay soils were generally 3 blows per foot (bpf) in samples taken at 2.5 feet bgs indicating a generally soft consistency. Moisture contents in the clay soils ranged from approximately 23 to 39 percent. Three Atterberg limits tests conducted on the fine-grained soils yielded plastic limits ranging from approximately 22 to 26 percent, liquid limits ranging from approximately 34 to 68 percent, and plasticity indices ranging from approximately 12 to 42 to percent. These limits indicate that the fine-grained soils on the site range from lean to fat clay.

3.4.4 Older Alluvium (Terrace Deposits)

In all of our borings and most of the test pit explorations (TP-1 through TP-5, and TP-8), we encountered clayey gravel with sand, silty sand, and poorly graded gravel with silt and sand beneath the surficial fill and clay soils. In our test pit explorations, the gravels within the upper approximately 5 to 10 SPT N-values in these materials in the upper portion of the formation, from approximately 5 to 10 feet bgs ranged from 14 to 31 bpf, indicating a generally medium dense relative density. Below approximately 15 feet bgs, the SPT N-values in this material ranged from approximately 33 to greater than 50 bpf indicating a generally dense to very dense relative density. The sample from approximately 50 feet bgs in boring B-2, was laminated silty sand with only fine sand and may represent the top of the underlying Lincoln Creek formation.

Moisture contents in the older alluvial deposits ranged from approximately to 11 to 57.5 percent. The highest moisture contents came from wet samples of silty sand from our test pit explorations where minor to moderate seepage was observed. Fines content analyses on six samples of the clayey gravels with sand from between approximately 5 and 10 feet bgs yielded fines contents of between approximately 19 and 37 percent. Fines content analyses on two samples of silty sand from between approximately 10 and 13 feet bgs yielded a fines content of approximately 15 percent. One Atterberg limits test conducted on the portion of a gravel sample from 7.5 feet bgs in boring B-1 yielded a plastic limit of 26 percent and a liquid limit of 50 percent indicating that the fines fraction of the gravelly soils is generally clayey.

One grain size analysis conducted on a sample from approximately 7 feet bgs from TP-2 yielded approximately 26 percent fines, 39 percent sand, and 35 percent gravel. However, prior to the test, the sample was observed to have cobbles and a high percentage of gravel that slacked during the test process. Therefore, we consider this sample to be gravel, and also indicate that many of the gravels/cobbles are highly weathered, have minor cementation, and/or the potential for slaking.

3.4.5 Groundwater

Mud rotary drilling techniques do not allow for direct measurements of groundwater levels at the time of drilling. However, we encountered minor to moderate seepage in our test pit excavations between approximately 9.5 and 13 feet bgs. Additionally, water levels in the two monitoring wells were between approximately 4.5 and 6 feet bgs at the time of our departure and following manual bailing. For this project, we recommend using a design groundwater elevation of 4 feet bgs. This corresponds to an approximate elevation of 184.6 feet (NAVD 88).

Signs of groundwater (e.g., mottling) were observed in samples above the measured water levels; therefore, seasonal high groundwater levels may be slightly higher than those identified at the time of our explorations.

3.5 Geologic and Seismic Hazards

3.5.1 Seismic Design Parameters

The 2018 International Building Code (IBC) and associated *Minimum Design Loads for Buildings and Other Structures* (American Society of Civil Engineers [ASCE] 7-16) will be adopted in Washington on November 1, 2020. As such, if the development package is submitted after this date, design parameters from the most current code will be needed. Therefore, we have provided parameters from the current state of Washington code (based on 2015 IBC and ASCE 7-10) for submittals prior to November 1, 2020, and parameters from the most recent code for submittals after November 1, 2020.

We evaluated potential seismic shaking at the site using data obtained from the U.S. Geological Survey (USGS) Seismic Design Maps (USGS 2018). The expected peak bedrock acceleration having a 2 percent probability of exceedance in 50 years (2,475-year return period) is 0.494g for the ASCE 7-10 code and 0.517g for the ASCE 7-16 code. This value represents the peak acceleration on bedrock beneath the site and does not account for ground motion amplification due to site-specific effects. The peak ground acceleration (PGA) is determined by applying a site class factor to the peak bedrock acceleration. The PGA accounting for site amplification is PGA_M = 0.497g for ASCE 7-10 and PGA_M = 0.568g for ASCE 7-16. Refer to Section 3.5.2 Site Classification for a discussion of ground motion amplification.

We obtained a deaggregation of the seismic sources contributing to the expected peak bedrock acceleration shown above from the USGS Unified Hazard Tool (USGS 2018). Seismic sources contributing to this potential ground shaking include the shallow crustal faults and the Cascadia Subduction Zone (CSZ) megathrust and intraplate sources. The data indicated that the “mean source” for shaking at the site at all potential periods of interest (0.0 to 2.0) is a magnitude 7.7 earthquake with an epicenter approximately 58.5 kilometers from the site for the ASCE 7-10 code and a magnitude 7.9 earthquake with an epicenter approximately 53.6 kilometers from the site for the ASCE 7-16 code.

3.5.2 Site Classification

The “Site Class” is a designation used to quantify ground motion amplification. The classification is based on the stiffness of the upper 100 feet of a site, as evaluated with SPT or shear wave velocity data. For our analysis, SPT N-values were extrapolated from the bases of our borings to a depth of 100 feet. Based on our analysis of SPT N-values, the site soils are estimated to have a shear wave velocity profile consistent with **Site Class D**, without regard for liquefaction potential.

Our analyses have identified that a liquefaction hazard is present at the site. The IBC indicates that sites where a liquefaction hazard is identified should be represented as **Site Class F** and a site-specific ground response analysis be completed to determine the response spectrum for design, unless the building period is less than 0.5 second. We understand that proposed development will consist of lightweight, one-story, wood- or steel-framed structures that are assumed to fundamental periods of less than 0.5 second, so **Site Class D** is allowed per the code. Refer to Section 4.3 Seismic Design of this report for additional discussion regarding the recommended site class value for design of structures.

3.5.3 Liquefaction

Liquefaction is a phenomenon caused by a rapid increase in pore water pressure that reduces the effective stress between soil particles, resulting in the sudden loss of shear strength in the soil. Granular soils, which rely on interparticle friction for strength, are susceptible to liquefaction until the excess pore pressures can dissipate. Sand boils and flows observed at the ground surface after an earthquake are the result of excess pore pressures dissipating upwards, carrying soil particles with the draining water. In general, loose, saturated sand soils with low silt and clay contents are the most susceptible to liquefaction. Silty soils with low plasticity are moderately susceptible to liquefaction and softening under relatively higher levels of ground shaking. For any soil type, the soil must be saturated for liquefaction to occur.

We performed site-specific liquefaction potential analysis on the soils underlying the site using procedures outlined in Idriss and Boulanger (2014). The analysis was conducted using the data from our soil borings. We completed the liquefaction hazard analysis using the site class adjusted Maximum Considered Earthquake Geometric Mean PGA (PGA_M) from both the ASCE 7-10 and ASCE 7-16 codes. We used the PGA_M and associated earthquake magnitude from each respective code in our analysis. We also assumed that the groundwater level was 5 feet bgs.

Based on our analysis, the saturated sandy soils below the groundwater table appear susceptible to liquefaction. The analysis indicates that liquefaction-induced ground settlement of approximately less than 1 inch will likely occur. We note the maximum depth of our explorations was approximately 50 feet bgs and potentially liquefiable soils could extend deeper; however, based on the relative density of the soils encountered at that depth and based on our knowledge of the regional geology, we determined that the soil below 50 feet bgs is not liquefiable. In general, we would consider such ground settlement to have the potential to cause differential settlement approximately half the total ground settlement (0.5 inches on average).

3.5.4 Earthquake-Induced Landsliding/Lateral Spreading

Based on the gentle slope gradients at the site and surrounding areas, it is our opinion the potential for earthquake-induced landsliding and lateral spreading is low.

3.5.5 Fault Rupture

The potential impacts of fault rupture include abrupt, large, differential ground movements and associated damage to structures that might straddle a fault, such as a bridge abutment or retaining wall. The USGS maintains information on faults and associated folds in the United States that are believed to be sources of magnitude 6 or higher earthquakes during the Quaternary period (USGS, 2019). Based on our review of the USGS Interactive Fault Map, the closest faults to the site are part of the Willapa Bay fault zone (45 miles west). Due to the distance between our site and the nearest mapped faults, the risk of rupture is low.

4.0 GEOTECHNICAL DESIGN RECOMMENDATIONS

4.1 Foundation Support Recommendations

4.1.1 General

Section 12.13.9 of the IBC states that sites where the potential for soil strength loss, due to liquefaction, exists must be designed to accommodate the effects of liquefaction unless there is negligible risk of lateral spreading, no bearing capacity loss, and differential settlements of site soils or improved site soils do not exceed one fourth of the differential settlement threshold specified in Table 12.13-3. The site soils at the proposed athletic facility meet the exception requirements; therefore, the proposed buildings may be supported by conventional spread footings overlying compacted structural backfill following suitable depths of overexcavation of the near surface soils, although the system should be capable of accommodating the anticipated settlement.

The design philosophy behind the IBC is that a building will not collapse during a design-level earthquake. However, cosmetic and functional distress will occur, and even structural distress is likely to result, potentially rendering the structure unusable until repaired or replaced. If these performance criteria are not acceptable, we should be notified so we can modify our recommendations.

The following recommendations are based on the assumption that maximum structural loads will be no greater than 175 kips for column footings and 3 kips per linear foot for continuous wall footings. If structural loads are greater, then we should be contacted to verify that our recommendations are appropriate.

4.1.2 Dimensions and Design Criteria

Isolated column footings and strip footings should be at least 24- and 18-inches wide, respectively. The bottom of perimeter footings should extend at least 18 inches below the lowest adjacent exterior grade, while interior footings should extend at least 12 inches below the base of the floor slab. The footings may be sized assuming a maximum allowable bearing pressure of 2,000 pounds per square foot (psf). This value may be increased by one-third for short-term, non-seismic loads (e.g., wind loads). No increase should be assumed for seismic loading conditions. The above bearing pressure values represent net bearing pressures; the weight of the footings and overlying backfill can be ignored in calculating footing sizes.

As mentioned previously, there is approximately 3 to 8 feet of soft and loose fill overlying the site. We would anticipate about 2 feet or more of overexcavation below footings will be necessary to achieve the recommended bearing pressure. The actual depth of overexcavation is best determined in the field during construction. Therefore, contract documents should be prepared in a manner that allows for variable amounts of overexcavation and backfill, depending on the conditions encountered. For budgeting purposes, we would recommend an initial amount of overexcavation below all footings of 3 feet and

18 inches below slabs-on-grade. Overexcavation should be performed as described on Figure 3. Backfill material should be consistent with material described in Section 7.4.2 of this report.

4.1.3 Lateral Resistance

Lateral loads on footings can be resisted by passive earth pressures on the sides of footings and by friction on bearing surfaces. We recommend that passive earth pressures be calculated using an equivalent fluid density of 250 pounds per cubic foot (pcf). We recommend using a friction coefficient 0.55 for foundations on aggregate base subgrade. The passive earth pressure and friction components may be combined, provided the passive component does not exceed two-thirds of the total. The lateral resistance values do not include safety factors.

4.1.4 Settlement

Footings that bear on new structural fill should experience “static” settlement of less than 1 inch, with differential settlement of less than half that value over a 50-foot span. As previously noted, overall seismically induced ground settlement on the order of 1 inch may occur in addition to the static settlement. Differential seismic settlement over a 50-foot span is estimated to be on the order of 1/2 inch. A total differential settlement, including static and seismic settlement, over a 50-foot span is estimated to be about 1 inch or less.

4.1.5 Foundation Subgrade Preparation

Footings may bear on structural fill that is placed and compacted as recommended herein. Prior to the placement of reinforcing steel in the footing excavations, loose or disturbed soils should be removed. If water infiltrates and pools in the excavation, the water, along with any disturbed soil, should be removed before placing the reinforcing steel. We recommend that contract documents be prepared in such a manner that the contractor is required to choose means and methods that will avoid disturbance of excavated surfaces.

We recommend that Hart Crowser observe all foundation excavations before placement of aggregate base to determine that bearing surfaces have been adequately prepared and that the soil conditions are consistent with those observed during our explorations.

4.2 Building Floor Slabs

Satisfactory subgrade support for building floor slabs supporting up to 175 psf areal loading can be obtained from a building floor slab on a minimum of 12 inches of sand and gravel structural fill prepared in conformance with Section 7.0 Earthwork Recommendations of this report. A minimum 6-inch-thick layer of clean aggregate base should be placed over the structural fill to assist as a capillary break. Aggregate base material placed directly below the slab should be 3/4 to 1 inch maximum size and have less than 5 percent fines.

Flooring manufacturers often require vapor barriers to protect flooring and flooring adhesives. Many flooring manufacturers will warrant their product only if a vapor barrier is installed according to their recommendations. Selection and design of an appropriate vapor barrier, if needed, should be based on discussions among members of the design team. Slabs should be reinforced according to their proposed use and per the structural engineer's recommendations.

4.3 Seismic Design

We have provided design parameters for both the current 2015 IBC and future 2018 IBC. We obtained the seismic hazard from the National Seismic Hazard Maps (USGS 2016) for Latitude 46.6507 and Longitude -122.9588 for the 2,475-year return period. The parameters provided in Tables 1 and 2 are appropriate for code-level seismic design.

Table 1 – Seismic Design Parameters 2015 IBC (ASCE 7-10)

Parameter	Value
Site Class	D
Spectral Response Acceleration, S_s	1.145 g
Spectral Response Acceleration, S_1	0.498 g
Site Coefficient, F_a	1.042
Site Coefficient, F_v	1.502
Spectral Response Acceleration (Short Period), S_{DS}	0.795 g
Spectral Response Acceleration (1-Second Period), S_{D1}	0.499 g
Mapped MCE_G peak ground acceleration, PGA	0.494
PGA Site Coefficient, F_{PGA}	1.006
Maximum Considered Earthquake Geometric Mean PGA, PGA_M	0.497 g

Table 2 – Seismic Design Parameters 2018 IBC (ASCE 7-16)

Parameter	Value
Site Class	D
Spectral Response Acceleration, S_s	1.17 g
Spectral Response Acceleration, S_1	0.483 g
Site Coefficient, F_a	1.032
Site Coefficient, F_v	1.817
Spectral Response Acceleration (Short Period), S_{DS}	0.805 g
Spectral Response Acceleration (1-Second Period), S_{D1}	0.585 g
Unfactored Peak Ground Acceleration, PGA	0.517 g
Site Coefficient, F_{PGA}	1.1
Maximum Considered Earthquake Geometric Mean PGA, PGA_M	0.568 g

Notes:

a. Per ASCE 7-16 Section 11.4.8, Site Class D sites with S_1 greater than or equal to 0.6g; Site Class E sites with S_s greater than or equal to 1.0g; or Site Class D or E sites with S_1 greater than or equal to 0.2g shall have a site-specific ground motion hazard analysis performed in accordance with Section 21.2 unless Exceptions are taken per Section 11.4.8.

b. Per Exception 2 of ASCE 7-16, Section 11.4.8, structures on Site Class D sites with S_1 greater than or equal to 0.2g, a ground motion hazard analysis is not required provided the value of the seismic response coefficient C_s is determined by Eq. (12.8-2) for values of $T \leq 1.5T_s$ and taken as equal to 1.5 times the value computed in accordance with either Eq. (12.8-3) for $T_L \geq T > T_S$ or Eq. (12.8-4) for $T > T_L$.

As discussed previously, our findings indicate there is a potential for the site to be affected by liquefaction; therefore, a Site Class F is required by the IBC. However, in accordance with ASCE 7-10 (ASCE/SEI 2010), Site Class F soils vulnerable to potential failure or collapse under seismic loading, such as liquefiable soils, may be classified without regard for liquefaction, provided the structures under design will have a fundamental period of vibration equal to or less than 0.5 second or if the liquefaction hazard has been properly mitigated. The structural engineer should verify the building fundamental period is below 0.5 second.

5.0 DRAINAGE DESIGN RECOMMENDATIONS

5.1 Temporary Drainage

During mass grading at the site, the contractor should be made responsible for temporary drainage of surface water as necessary to prevent standing water and/or erosion at the working surface. During rough and finished grading of the building site, the contractor should keep all footing excavations and building pads free of water.

5.2 Surface Drainage

The finished ground surface around buildings should be sloped away from their foundations at a minimum 2 percent gradient for a distance of at least 5 feet. Downspouts or roof scuppers should discharge into a storm drain system that carries the collected water to the existing regional stormwater system. They should not be attached to wall or footing drains. Trapped planter areas should not be created adjacent to buildings without providing means for positive drainage (i.e., swales or catch basins).

5.3 Infiltration Characteristics of Site Soils

Surficial fill soils are primarily fine-grained clay soils as such we anticipate the infiltration rate into theses soils to be low. As mentioned previously, these surficial soils are approximately 3 to 8 feet in thickness. The underlying soils consists of medium dense to dense sands and gravels. We determined the infiltration rate of onsite native soils using equations based on grain size distribution in accordance with the Stormwater Management Manual for Western Washington Section V-5.4. Using the equation developed by Massman, we determined a design infiltration rate of approximately 1.2 inches per hour. Even though the native soils appear to have an infiltration rate suitable for the design of infiltration systems, due to the design water table of 5 feet bgs, and the low permeability of the surficial fill soils, it is our opinion the use of infiltration systems is not feasible at this site.

If stormwater detention systems are proposed, then the use of closed or lined systems will be required. These systems or liners will need to be designed to resistant buoyancy forces. For design of stormwater detention systems, the groundwater level should be assumed as shallow as 2 feet below existing grade.

5.4 Pool Design

The pool shell walls should be designed to resist an at-rest soil pressure of 55 pcf acting as an equivalent fluid weight. This is assuming structural backfill in accordance with Section 7.4 of this report will be placed around the pool perimeter. We recommend a minimum 12-inch-thick layer of drain rock be placed along the base of the pool excavation and along the pool walls. The filter layer of drain rock must be wrapped in a filter fabric in accordance with Table 2 from Section 9-33.2(1) of the WSDOT Standard Specifications, in order to prevent the migration of fines.

We recommend providing hydrostatic relief to the pool by one of two methods. The first method involves installing a series of hydrostatic pressure relief valves along the bottom of the pool. The second method would require the construction of a sump beneath the pool and installing a pump sump. The sump pump could then be used to drain the drainage layer beneath the pool during maintenance periods when the pool is empty. If this approach is used, the drainage layer below the pool should include 4-inch perforated drainpipe at 25 feet on centers in addition to a perimeter drain.

The decking around the pool will consist of concrete slabs-on-grade. They should be constructed in a manner consistent with recommendations provided in Section 4.2 Building Floor Slabs of this report. We recommend that decking be structurally isolated from the pool and spa shells and the skimmer.

The pool floor should be designed in accordance with Section 4.2 Building Floor Slabs of this report. The boring logs indicate soft fill soils to a depth of 5 feet bgs in the vicinity of the planned pool. As such, we do not expect a significant amount of overexcavation; however, soft soils encountered in the pool footprint should be removed to the more competent native sands and gravels. Given the close proximity of the pool bottom to the water table, it is anticipated that some dewatering in accordance with Section 7.3.3 Dewatering of this report will be required such that the bottom of the excavation is not disturbed. The pool will need to be underlain by a drainage system including perforated cross drains in accordance with Section 5.5 Subsurface Drainage of this report to prevent heave of the pool when the pool is emptied for maintenance or other reasons.

In lieu of providing hydrostatic pressure relief, the structural engineering may provide a concrete section at the bottom of the pool that will be thick enough to resist hydrostatic pressures. We recommend using a design groundwater elevation of 184.6 feet (NAVD 88).

Once the final pool design is complete, we should be allowed to review and modify our recommendations as necessary.

5.5 Subsurface Drainage

We estimate that the seasonal high groundwater table may rise to within 4 feet of the existing ground surface. As such, we recommend installing a perimeter footing and subslab drainage system at the proposed buildings. Additionally, if trapped planters or adverse grades are created adjacent to buildings, then the use of footing drains is even more important.

The footing drainage system should consist of a filter fabric-wrapped, drain rock-filled trench that extends at least 12 inches below the lowest adjacent grade (i.e., crawlspace or slab subgrade elevation). A perforated pipe should be placed at the base to collect water that gathers in the drain rock. The drain rock and filter fabric should meet specifications outlined in Section 7.4 Structural Fill and Backfill.

The subslab drainage systems should consist of a minimum 8-inch layer of drain rock beneath the entire slab. The drain rock should be underlain by a geotextile filter fabric. We recommend using 4-inch perforated collector pipes embedded within the drain rock layer with a spacing no greater than 30 feet on center.

The discharge for subsurface drainage systems should not be tied directly into the stormwater drainage system, unless mechanisms are installed to prevent backflow. The use of a sump pump may be required.

5.6 Bioretention Planters

We understand the new drainage system will include bioretention planters. Information concerning the bioretention planters was provided by the DRL group via email on June 12, 2020. Based on our review of the provided information, the planters are a drainage swale with slopes of 3H:1V or flatter with an approximate 8-foot base. The planters consist of 2 inches of mulch on top of 18 inches of Biosoil along the side slopes. The base cross section consists of 2 inches of mulch on top of 18 inches of Biosoil on top of 12 inches of drain rock on top of an 8-inch underdrain. We understand the design groundwater elevation is approximately even with the base of the bioretention planter (elevation 184.6 feet NAVD) at the critical cross section.

We recommend placing an impermeable liner along the base of the bioretention planters’ excavation prior to placing drain rock and Biosoil, to prevent the flow of groundwater into the bioretention planter. The impermeable liner must meet the strength requirements of Table V-1.6 of the Stormwater Management Manual for Western Washington (Ecology 2019). We have reviewed the information provided by DRL and we have determined that the bioretention planters are not at risk of failure from failure from the buoyant forces from the groundwater. If the design of the bioretention planters changes from that provided, we must be allowed to review the new design and adjust our recommendations as necessary.

The drain rock must meet the requirements of section 7.4.6 of this report.

6.0 PAVEMENT DESIGN AND CONSIDERATIONS

6.1 General

Our pavement design recommendations include options for flexible Asphaltic Concrete (AC) and rigid Portland Cement Concrete (PCC) pavement. Our design thicknesses assume that new pavements will be supported by new structural fill placed and compacted per Section 7.0 Earthwork Recommendations of this report. It is our understanding that the pavement sections will be primarily used by pedestrians, maintenance vehicles, and consistent patrols from security vehicles.

6.2 Pavement Sections

The PCC and AC pavement sections in Table 3 are minimum recommended material thicknesses. If the anticipated site traffic is different than noted above, then the recommended sections should be reevaluated.

Table 3 – PCC and AC Pavement Sections

Pavement Type	AC Thickness (inches)	Aggregate Base Thickness (inches)
PCC Pavement	6	4
AC Pavement	3	6

Due to the presence of soft surficial clay soils, we recommend that an additional 18 inches of existing fill be removed and replaced with Stabilization Material in accordance with Section 7.4 of this report.

6.3 Pavement Materials

6.3.1 Flexible AC

Flexible AC should be 1/2-inch hot mix asphalt in conformance with the specifications provided in Washington State Department of Transportation (WSDOT) Standard Specifications (WSS) 5 04 – Hot Mix Asphalt and WSS 9 03.8 – Aggregates for Hot Mix Asphalt (WSDOT 2018). The asphalt cement binder should be PG 64-22 Performance Grade Asphalt Cement, according to WSS 9-02.1(4) – Performance Graded Asphalt Binder. The AC should be placed with a minimum lift thickness of 1.5 inches and maximum thickness of 3 inches and be compacted to at least 91 percent of Rice Density of the mix, as determined in accordance with American Society for Testing and Materials (ASTM) D 2041.

6.3.2 Rigid PCC

Rigid PCC pavement should meet the specifications provided in WSS 5 05 – Cement Concrete Pavement. The PCC should have a minimum compressive strength of 4,000 pounds per square inch (psi) and nominal maximum aggregate size of 1.5 inches. The PCC should be constructed with a maximum joint spacing of 15 feet. The slabs should be interlocked at contraction joints (e.g., continuous slab with no dowels). However, dowels should be used at construction and expansion joints.

6.3.3 Aggregate Base

Imported granular material used as base aggregate (base rock) for conventional pavements should meet the criteria specified in Section 7.4 Structural Fill and Backfill of this report. The base aggregate should be compacted to not less than 95 percent of the maximum dry density, as determined by ASTM D 1557.

6.3.4 Soil Subgrade

The pavement design assumes the soil subgrade consists of previously placed engineered fill with a resilient modulus of 5,000 psi. This assumes that subgrade has been moisture conditioned and compacted in conformance with Section 7.0 Earthworks Recommendations of this report.

7.0 EARTHWORK RECOMMENDATIONS

7.1 General

Based on available information, we anticipate that earthwork will generally consist of light mass grading and excavation and backfilling for utilities and foundations. We recommend that earthwork activities be conducted in accordance with the WSS (WSDOT 2018).

7.2 Site Preparation

7.2.1 Clearing and Grubbing

Initial site preparation and earthwork operations will include clearing and grubbing, stripping, and grading to establish subgrade elevation for improvements. We estimate the depth of material to be stripped is between 4 and 8 inches (average 6 inches). Actual stripping depths should be based on field observations at the time of construction. Stripped material should be transported off-site for disposal or stockpiled for use in landscaped areas.

Trees and their root balls should be grubbed out to the depth of significant roots, which could exceed 3 to 5 feet bgs for the tall trees. Depending on the methods used to remove the root balls, considerable disturbance and loosening of the subgrade could occur during site grubbing. We recommend that soil disturbed during grubbing operations be removed to expose firm, undisturbed subgrade. The resulting excavations should be backfilled with compacted structural fill.

7.2.2 Demolition

Demolition should include complete removal of existing site improvements within areas to receive new pavements, buildings, or engineered fill. Underground utility lines or vaults encountered in areas of new improvements should be completely removed or grouted full if left in place. Any existing concrete structures should be removed if located beneath the proposed building or pavement areas.

Voids resulting from removal of pavements, sidewalks, etc. or loose soil in utility lines should be backfilled with compacted structural fill, as discussed in Section 7.4 Structural Fill and Backfill of this report. The bases of such excavations should be completed to a firm subgrade before filling, and their sides configured to allow for uniform compaction at the edges of the excavations.

Materials generated during demolition of existing improvements should be transported off site for disposal or stockpiled in areas designated by the owner. In general, these materials will not be suitable for reuse as engineered fill. However, asphalt, concrete, and base rock materials may be crushed and recycled for use as general fill. Such recycled materials should meet the specifications for imported granular material, as described in Section 7.4 Structural Fill and Backfill of this report.

7.2.3 Subgrade Preparation and Evaluation

Following stripping, demolition, site preparation, and rough grading, the suitability of the subgrade should be evaluated by proof rolling with a fully loaded dump truck or similar heavy rubber-tired construction equipment to identify any remaining soft, loose, or unsuitable areas. The proof roll should be conducted prior to placing new fill. Proof rolling should be observed by a representative of Hart Crowser who would evaluate the suitability of the subgrade and identify areas of yielding that are indicative of soft or loose soil. During wet weather or when the exposed subgrade is wet or unsuitable for proof rolling, the prepared subgrade should be evaluated by observing excavation activity and probing with a steel foundation probe. Observations and probing should be performed by Hart Crowser.

If soft or loose zones are identified during proof rolling or probing, these areas should be excavated to the extent indicated by Hart Crowser and replaced with structural fill.

If site preparation activities cause excessive subgrade disturbance, replacement with imported structural fill may be necessary. Disturbance to the subgrade should be expected if site preparation and earthwork are conducted during periods of excessive wet weather and/or when the moisture content of the surficial soil exceeds optimum.

7.2.4 Wet Soil/Wet Weather Construction

The near-surface site soils generally consist of fat to lean clay. These materials will have a moderate susceptibility to becoming disturbed when they are wet or heavily trafficked. If not carefully executed, site preparation, utility trench work, and pavement construction can create extensive soft areas, and significant repair costs can result. Earthwork planning should include considerations for minimizing subgrade disturbance.

One method for minimizing subgrade disturbance during construction is through the use of temporary haul roads and staging areas. Based on our experience, between 12 and 18 inches of imported granular material is generally required to construct staging areas and haul roads that will support typical construction traffic. However, the actual thickness will depend on the contractor’s means and methods, and accordingly, should be the contractor’s responsibility. Additionally, a geotextile fabric may be placed as a barrier between the subgrade and imported granular material in areas of repeated construction traffic to provide separation between the imported rock and native soils. The imported granular material and geotextile fabric should meet the specifications in Section 7.4 Structural Fill and Backfill of this report.

7.3 Excavation

7.3.1 General Excavation

Site soils are generally soft/loose within expected excavation depths. However, denser sand and gravel soils may be encountered in excavations that are 5 feet or greater. It is our opinion that conventional earthmoving equipment in proper working condition should be capable of making necessary general excavations for utilities, footings, and other earthwork. The earthwork contractor should be responsible for providing equipment and following procedures as needed to excavate the site soils, as described in this report. Permanent slope excavations should have a maximum gradient of 2 horizontal to 1 vertical (2H:1V).

7.3.2 Temporary Excavation Stability

Due to the granular nature of the site soils, even shallow excavations will have a high susceptibility to sloughing, raveling, or caving. Open excavation techniques may be used for temporary excavations above the groundwater table. For planning purposes only, we expect that cut slopes may be excavated at an angle of 1H:1V or flatter. However, because of the variables involved, actual slope angles required for stability in temporary cut areas can only be estimated before construction. We recommend that stability of the temporary slopes used for construction be the responsibility of the contractor, since the contractor is in control of the construction operation and is continuously at the site to observe the nature and condition of the subsurface.

All temporary soil cuts associated with site excavations should be adequately sloped back to prevent sloughing and collapse, in accordance with Department of Occupational Safety and Health (DOSH) Chapter 296-155 Washington Administrative Code (WAC) Part N Excavation, Trenching, and Shoring Occupational Safety and Health Administration (OSHA) guidelines.

The stability and safety of cut slopes depend on a number of factors, including:

- Type and density of the soil;
- Presence and amount of any seepage;
- Depth of cut;
- Proximity and magnitude of the cut to any surcharge loads, such as stockpiled material, traffic loads, or structures;
- Duration of the open excavation; and
- Care and methods used by the contractor.

According to DOSH guidelines, we interpret the existing site soils as Type C.

It is the responsibility of the contractor to ensure the excavation is properly sloped or braced for worker protection, in accordance with DOSH guidelines. To assist with this effort, for planning purposes only, we make the following recommendations regarding temporary excavation slopes.

- Protect the slope from erosion with plastic sheeting for the duration of the excavation to minimize surface erosion and raveling.
- Limit the maximum duration of open excavation to the shortest time period practicable.
- Place no surcharge loads (equipment, materials, etc.) within 10 feet of the top of any excavation or slope.

More restrictive requirements may apply, depending on specific site conditions, which should be continuously assessed by the contractor.

If temporary sloping is not feasible due to site spatial constraints, excavations could be supported by internally braced shoring systems, such as a trench box or other temporary shoring. There are a variety of options available. We recommend the contractor be responsible for selecting the type of shoring system to use. We note that box shoring is a safety feature used to protect workers and does not prevent caving. If the excavations are left open for extended periods of time, caving of the sidewalls may occur. The presence of caved material will limit the ability to properly backfill and compact the trenches. The voids between the box shoring and the sidewalls of the trenches should be properly filled with sand or gravel before caving occurs.

7.3.3 Dewatering

Groundwater is expected to be encountered at approximately 5 feet bgs. Construction of utilities and other improvements that extend below groundwater levels will require dewatering and shoring programs capable of adapting to varied soil and groundwater conditions. We anticipate that water will have a low to moderate flow rate, although zones of sandy soils may present rapid water flow. Significant dewatering efforts may be required for the pool installation. The contractor shall be prepared to provide shoring and dewatering systems that are capable of adapting to varied soil and groundwater conditions. In addition to safety considerations, running soil, caving, or other loss of ground will increase backfill volumes and can result in damage to adjacent structures or utilities.

Due to low to moderate seepage observed while excavating test pits, the use of pumping from sumps within excavations is expected to be feasible for trench dewatering and dewatering of the area below the planned pool.

We anticipate that the base of excavations will be soft and/or unstable if groundwater is present or within a few feet of the base of the trenches. If that is the case, we recommend placing stabilization material at the base of excavations. Stabilization material should be placed to a minimum thickness of 12 inches, or as needed to provide an adequate working surface and should meet the criteria discussed in Section 7.4 Structural Fill and Backfill of this report. The use of a geotextile separation fabric may be necessary below stabilization material to help prevent the stabilization material from pushing into the unstable base materials.

7.4 Structural Fill and Backfill

Structural fill should be considered to include subgrade soils beneath buildings, foundations, slabs, and pavements and in other areas intended to support structures or within the influence zone of structures.

Fill should only be placed over a subgrade that has been prepared in conformance with the prior sections of this report. A variety of material may be used as structural fill at the site. However, all material used as structural fill should be free of organic matter or other unsuitable materials and should meet specifications provided in the WSS (WSDOT 2018). A brief characterization of some of the acceptable materials and our recommendations for their use as structural fill are provided below. All materials should be placed and compacted in lifts with maximum uncompacted thicknesses and relative densities, as recommended in the tables that follow.

7.4.1 On-Site Soils

Due to the moist, soft nature of the on-site near-surface fill soils, we recommend that these *in situ* soils not be used as structural fill, unless extended periods of hot, dry weather are forecast, which would allow for extensive moisture conditioning (e.g., drying) of the soils and the subgrade. Topsoil and organic-rich soils are also not suitable for structural fill.

On-site, near-surface soils that might be used for fills generally consist of clayey sand and gravel. These soils are sensitive to moisture and will require significant moisture conditioning before they can be used. If properly moisture conditioned (i.e., dried) this material may be used as structural fill, provided that debris, organic materials, and particles over 6 inches in diameter are removed and it otherwise meets the specifications provided in WSS 9 03.14(3) – Common Borrow.

7.4.2 Imported Select Structural Fill

Imported granular material used as structural fill should be pit or quarry run rock, crushed rock, or crushed gravel and sand and should meet the specifications provided in WSS 9 03.9(1) – Ballast, WSS 9 03.14(1) – Gravel Borrow, or WSS 9 03.14(2) – Select Borrow. However, the imported granular material should also have a maximum size of 2 inches, be angular and fairly well graded between coarse and fine material, have less than 5 percent by dry weight passing the U.S. Standard No. 200 mesh sieve, and have at least two mechanically fractured faces.

7.4.3 Aggregate Base

Imported granular material used as aggregate base (base rock) beneath pavements should be clean, crushed rock or crushed gravel and sand that is fairly well graded between coarse and fine. The base aggregate should meet the specifications provided in WSS 9 03.9 – Aggregates for Ballast and Crushed Surfacing, depending upon application. For use beneath general building slabs, the base rock should also meet the gradation of WSS 9 03.9(3) – Crushed Surfacing for “Base Course,” although should have less than 5 percent by dry weight passing a U.S. Standard No. 200 mesh sieve.

For use beneath pavements or footings, the aggregate base should have a maximum particle size of 1 or 1.5 inches, while for use beneath buildings or sidewalk slabs should have a maximum particle size of 0.75 or 1 inch.

7.4.4 Trench Backfill

Trench backfill placed beneath, adjacent to, and for at least 12 inches above utility lines (i.e., the pipe zone) should consist of well graded granular material with a maximum particle size of 1 inch and should meet the specifications provided in WSS 9 03.12(3) – Gravel Backfill for Pipe Zone Bedding and the pipe manufacturer.

Within pavement and slab subgrades, the remainder of the trench backfill up to the subgrade elevation can consist of the above 1-inch material or of granular material with a maximum particle size of 2.5 inches, less than 10 percent by dry weight passing the U.S. Standard No. 200 mesh sieve, and meeting the specifications provided in WSS 9 03.19 – Bank Run Gravel for Trench Backfill.

7.4.5 Stabilization Material

Imported material that is placed as a stabilization layer for haul roads or staging areas should consist of a clean, angular, crushed rock, such as ballast or quarry spalls. The material should have a maximum particle size of 4 inches, a nominal size between 2 and 4 inches, less than 5 percent by dry weight passing the U.S. Standard No. 4 mesh sieve, and at least two mechanically fractured faces. The material should be free of organic matter and other deleterious material.

Material meeting the gradations of WSS 9-03.9(2) – Shoulder Ballast, WSS 9 03.12(1)B – Gravel Backfill for Foundations (Class B), WSS 9-03.12(5) – Gravel Backfill for Drains, WSS 9-13.1(2) – Light Loose Riprap, WSS 9-03.12(5) – Gravel Backfill for Drywells, or WSS 9-13.6 – Quarry Spalls is generally acceptable for use. Stabilization material should be placed in lifts between 12 and 18 inches thick and be compacted to a well-keyed condition with a smooth drum roller without using vibratory action.

Stabilization material should be separated from the base of soft or fine-grained subgrades with a layer of subgrade geotextile that meets the specifications provided in WSDOT SS 9-33.2(1) Table 3 – Geotextile for Separation or Soil Stabilization. The geotextile should be installed in conformance with the specifications provided in WSS 2-12 – Construction Geosynthetic.

7.4.6 Drain Rock

Drain rock used for subsurface drainage systems should meet the specifications provided in WSS 9 03.12(4) – Gravel Backfill for Drains. The drain rock should be wrapped in a geotextile fabric that meets the specifications provided in WSS 9 33.2 for drainage geotextiles. The geotextile should be installed in conformance with the specifications provided in WSS 2 12 – Construction Geosynthetic.

7.5 Fill Placement and Compaction

Structural fill should be placed and compacted in accordance with the following guidelines.

- Place fill and backfill on a prepared subgrade that consists of firm, inorganic native soils or approved structural fill.

- Place fill or backfill in uniform horizontal lifts with a thickness appropriate for the material type and compaction equipment. Table 4, below, provides general guidance for lift thicknesses.

Table 4 – Guidelines for Uncompacted Lift Thickness

Compaction Equipment	Guidelines for Uncompacted Lift Thickness (inches)		
	On-Site Soil	Granular and Crushed Rock Maximum Particle Size ≤ 1½ inch	Crushed Rock Maximum Particle Size > 1½ inch
Plate Compactors and Jumping Jacks	4 – 8	4 – 8	Not Recommended
Rubber-Tire Equipment	6 – 8	10 – 12	6 – 8
Light Roller	8 – 10	10 – 12	8 – 10
Heavy Roller	10 – 12	12 – 18	12 – 16
Hoe Pack Equipment	12 – 16	18 – 24	12 – 16

Note:

The above table is based on our experience and is intended to serve as a guideline. The information provided in this table should not be included in the project specifications.

- Use appropriate operating procedures to attain uniform coverage of the area being compacted.
- Place fill at a moisture content within approximately 3 percent of optimum as determined in accordance with ASTM D 1557. Moisture condition fill soil to achieve uniform moisture content within the specified range before compacting. Compact fill to the percent of maximum dry densities as noted in Table 5.
- Do not place, spread, or compact fill soils during freezing or unfavorable weather conditions. Frozen or disturbed lifts should be removed or properly recompacted prior to placement of subsequent lifts of fill soils.

Table 5 – Fill Compaction Criteria

Fill Type	Percent of Maximum Dry Density Determined in Accordance with ASTM D 1557		
	0 – 2 Feet Below Subgrade	>2 Feet Below Subgrade	Pipe Bedding and Pipe Zone
Mass Fill: fine-grained soils	92	90	-----
Mass Fill: granular materials	95	92	-----
Aggregate Base	95	95	-----
Trench Backfill	95	92	90
Nonstructural Trench Backfill	90	88	-----
Nonstructural Zones	90	88	90

Note:

“Nonstructural” areas are only located in landscaping zones, where the potential for localized trench settlement is acceptable to the owner.

During structural fill placement and compaction, a sufficient number of in-place density tests should be completed by Hart Crowser to verify that the specified degree of compaction is being achieved. For structural fill with more than 30 percent retained on the 3/4-inch sieve, Hart Crowser should visually verify proper compaction with a proof roll or other methods.

8.0 UTILITY CONSTRUCTION CONSIDERATIONS

In general, we recommend that utility trench cut design be the contractor's responsibility. For shallow trench excavations less than 4 feet deep, open cutting is not prohibited. Temporary shoring may be necessary if deeper excavation is required for utility placement or if the soils are unstable. The contractor should verify the condition of the side slopes during construction and lay back trench cuts as necessary to conform to current standards of practice. We can provide additional recommendations, as required.

8.1.1 Utility Bedding and Trench Backfill

For bedding and trench backfill materials, all minimum dry densities recommended are a percentage of the modified Proctor maximum dry density, as determined by the ASTM D1557 test procedure. We recommend the following for bedding and trench backfill materials:

- Use at least 6 inches of bedding for all pipe utilities, consisting of well-graded sand and gravel with less than 3 percent material passing the U.S. No. 200 mesh sieve based on the minus 3/4-inch fraction. Bedding material should be compacted to a firm non-yielding condition.

- The recommended bedding materials can be used as backfill around the pipe utilities (pipe zone backfill). Extend pipe zone backfill to at least the top of the utility pipe.

- For bedding material beneath manholes, use 6 inches of imported structural fill (or acceptable on-site material) that consists of well-graded sand and gravel with less than 3 percent material passing the U.S. No. 200 mesh sieve based on the minus 3/4-inch fraction. Compact the bedding material to 90 percent.

- Provide a firm, non-yielding, and stable subgrade for excavations for underground structures.

- Evaluate utilities that extend below the groundwater table for the potential to float out of the ground during high groundwater levels.

Deeper utilities may require dewatering well points to obtain a suitable working base. The contractor may elect to place a geotextile fabric at the base of the excavation to help create a suitable working surface.

9.0 CONSTRUCTION OBSERVATIONS

Satisfactory foundation and earthwork performance depends to a large degree on quality of construction. Sufficient monitoring of the contractor's activities is a key part of determining that the work is completed in accordance with the construction drawings and specifications. Subsurface conditions observed during construction should be compared with those encountered during subsurface explorations. Recognition of changed conditions often requires experience; therefore, Hart Crowser or their representative should visit the site with sufficient frequency to detect whether subsurface conditions change significantly from those anticipated.

We recommend that Hart Crowser be retained to monitor construction at the site to confirm that subsurface conditions are consistent with the site explorations and to confirm that the intent of project plans and specifications relating to earthwork, foundation, and pavement construction are being met. In particular, we recommend the foundation and building subgrades, infiltration system subgrade, pavement subgrade, and compaction of structural fill and aggregate bases be observed and/or tested by Hart Crowser.

10.0 LIMITATION

We have prepared this report for the exclusive use of Covenant Real Estate Group and their authorized agents for the proposed Green Hill School Athletic Facility in Chehalis, Washington. Our work was completed in general accordance with our Services Agreement dated February 28, 2019. Our report is intended to provide our opinion of geotechnical parameters for design and construction of the proposed project based on exploration locations that are believed to be representative of site conditions. However, conditions can vary significantly between exploration locations and our conclusions should not be construed as a warranty or guarantee of subsurface conditions or future site performance.

Within the limitations of scope, schedule, and budget, our services have been executed in accordance with generally accepted practices in the field of geotechnical engineering in this area at the time this report was prepared. No warranty, express or implied, should be understood.

Any electronic form, facsimile, or hard copy of the original document (email, text, table, and/or figure), if provided, and any attachments are only a copy of the original document. The original document is stored by Hart Crowser and will serve as the official document of record.

11.0 REFERENCES

ASCE/SEI 2016. *Minimum Design Loads for Buildings and Other Structures*, ASCE 7-16, American Society of Civil Engineers (ASCE) - Structural Engineering Institute (SEI), 2016.

ASCE/SEI 2010. *Minimum Design Loads for Buildings and Other Structures*, ASCE 7-10, American Society of Civil Engineers (ASCE) - Structural Engineering Institute (SEI), 2010.

Burmister 1948. “The Importance and Practical use of Relative Density in Soil Mechanics,” Proceedings of the American Society for Testing Material Committee Report/Technical Papers, Volume 48, pages 1249-1268, 1948.

Creative Engineering Options 2006. Geotechnical Engineering Study, Proposed New Health Center and Administrative Buildings, Green Hill Training School, Chehalis, Washington. Dated December 14, 2006.

GeoDesign, Inc. 2011. Updated Geotechnical Engineering Services, Residential Mental Health Housing Unit, Green Hill School, Chehalis, Washington. Dated May 2, 2011.

Idriss, I.M. and R.W. Boulanger 2014. “CPT and SPT based liquefaction triggering procedures”, Report No. UCD/CGM-14/01 Center for Geotechnical Modeling, Department of Civil and Environmental Engineering, University of California, Davis, CA.

Idriss, I. M., and Boulanger, R. W. (2008). Soil liquefaction during earthquakes. Monograph MNO-12, Earthquake Engineering Research Institute, Oakland, CA.

International Code Council (ICC) 2018. 2018 International Building Code (IBC).

ICC 2015. 2015 International Building Code.

Occupational Safety and Health Administration (OSHA) Technical Manual Section V: Chapter 2, Excavations: Hazard Recognition in Trenching and Shoring: http://www.osha.gov/dts/osta/otm/otm_v/otm_v_2.html.

Sadowski, A.J., Keller, W.E., Polenz, Michael, Lau, T.R., Cakir, Recep, Nesbitt, Elizabeth, Tepper, J.H., DuFrane, S.A., and Legoretta Paulín, Gabriel, 2018, *Geologic map of the Centralia 7.5-minute quadrangle, Lewis County, Washington*: Washington Geological Survey, Map Series 2018-05, scale 1:24,000.

Soil Survey Staff, Natural Resources Conservation Service, United States Department of Agriculture (USDA). Web Soil Survey. Available online at the following link: http://websoilsurvey.sc.egov.usda.gov/. Accessed May 2020.

U.S. Geological Survey 2018. USGS Unified Hazard Tool. Website: https://earthquake.usgs.gov/hazards/interactive/.

USGS 2016. U.S. Seismic Design Maps http://earthquake.usgs.gov/designmaps/us/application.php.

Washington State Department of Ecology (Ecology) 2019. *Stormwater Management Manual for Western Washington*, Publication Number 19-10-021.

Washington State Department of Transportation (WSDOT) 2018. *Standard Specifications for Road, Bridge, and Municipal Construction*, M 41-10.

Youd, T.L., Idriss, I.M., Andrus, R.D., Arango, I., Castro, G., Christian, J.T., Dobry, R., Finn, W.D.L., Harder, L.F., Hynes, M.E., Ishihara, K., Koester, J., Liao, S., Marcuson III, W.F., Martin, G.R., Mitchell, J.K., Moriwaki, Y., Power, M.S., Robertson, P.K., Seed, R., and Stokoe, K.H. (NCEER 1998). *Liquefaction Resistance of Soils: Summary Report from the 1996 NCEER and 1998 NCEER/NSF Workshop on Evaluation of Liquefaction Resistance of Soils*, ASCE, Journal of Geotechnical & Geoenvironmental Engineering, Vol. 127, October, pp 817-833.

\\seafs\Projects\Notebooks\1946100_Green_Hill_School_Athletic_Facility\Deliverables\Reports\Final Geotechnical Report\1946100_Green Hill School_ Final Geotechncial Report.docx

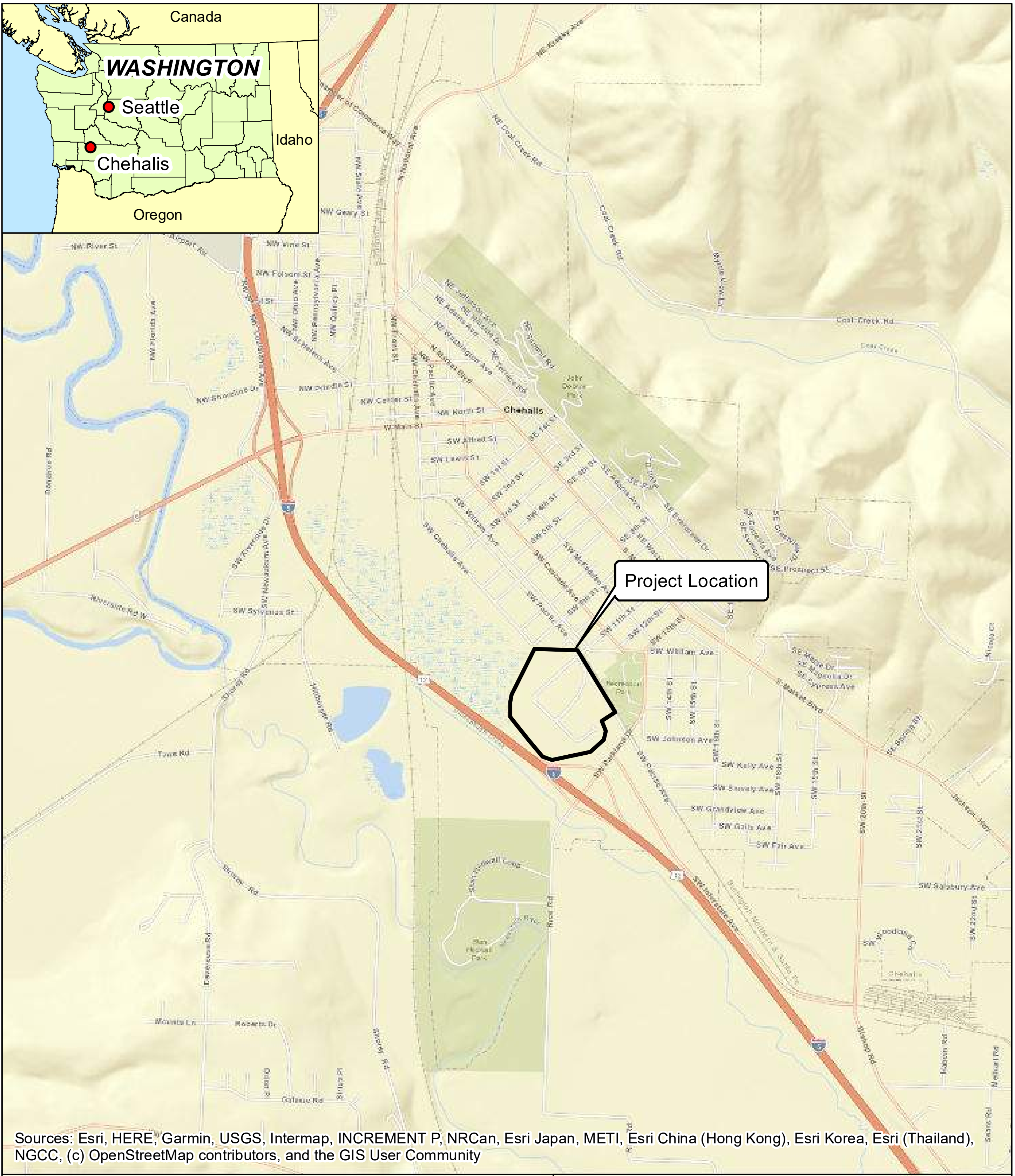

Sources: Esri, HERE, Garmin, USGS, Intermap, INCREMENT P, NRCan, Esri Japan, METI, Esri China (Hong Kong), Esri Korea, Esri (Thailand), NGCC, (c) OpenStreetMap contributors, and the GIS User Community

Document Path: L:\Notebooks\1946100_Green_Hill_School_Athletic_Facility\GIS\MGIS\1946100_VM.mxd Date: 5/15/2020 User Name: melissaschweitzer

0 1,000 2,000 4,000
Feet

Note: Feature locations are approximate.

N

Green Hill School Athletic Facility
Chehalis, Washington

Vicinity Map

19461-00

05/20

HARTCROWSER

Figure

1

Document Path: \\seafs\Projects\Notebooks\1946100_Green_Hill_School_Athletic_Facility\GIS\MGIS\1946100_SP.mxd Date: 6/3/2020 User Name: natalierothman

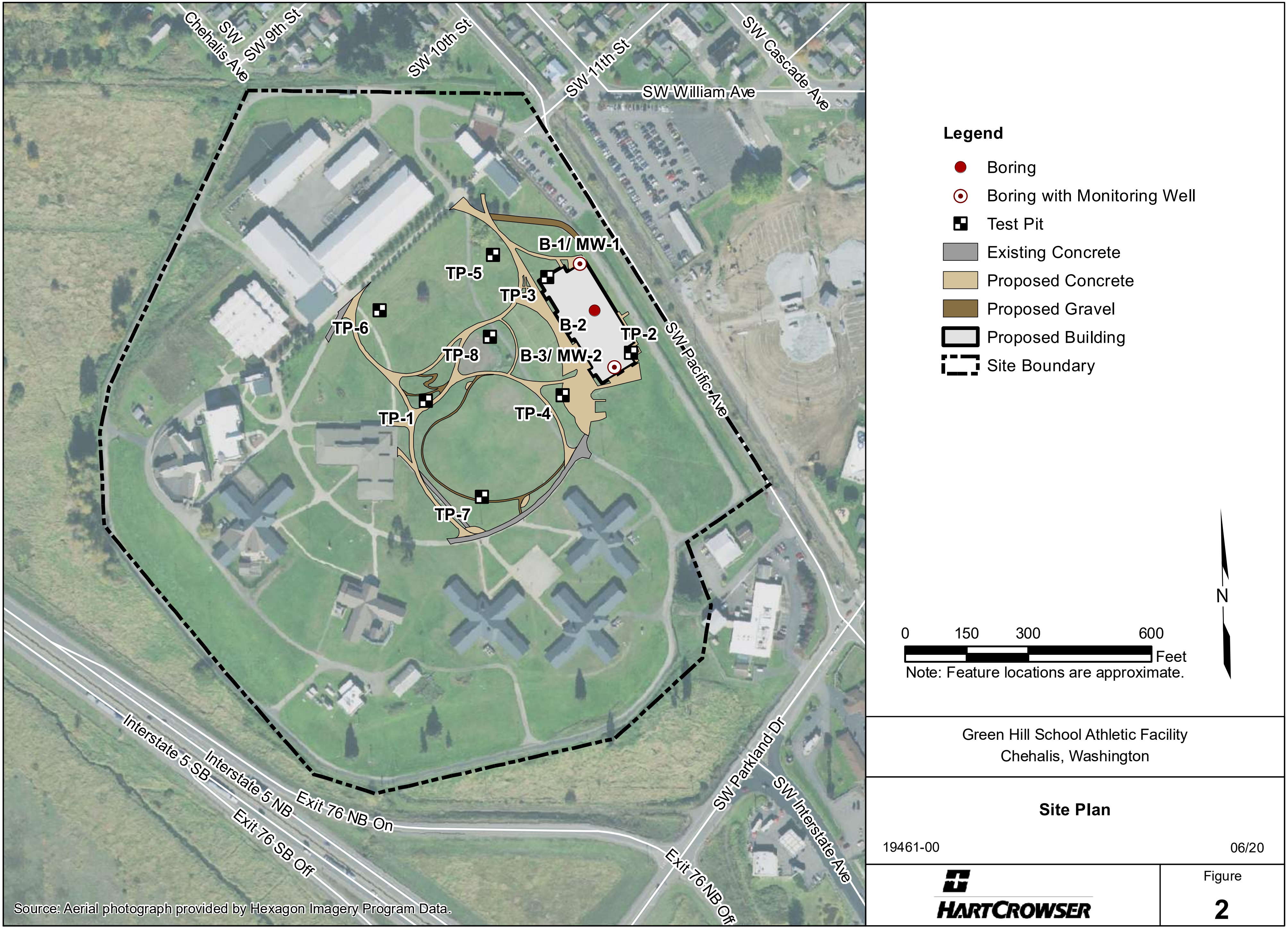

Note: Feature locations are approximate.

Source: Aerial photograph provided by Hexagon Imagery Program Data.

Green Hill School Athletic Facility
Chehalis, Washington

Site Plan

19461-00

06/20

HARTCROWSER

Figure

2

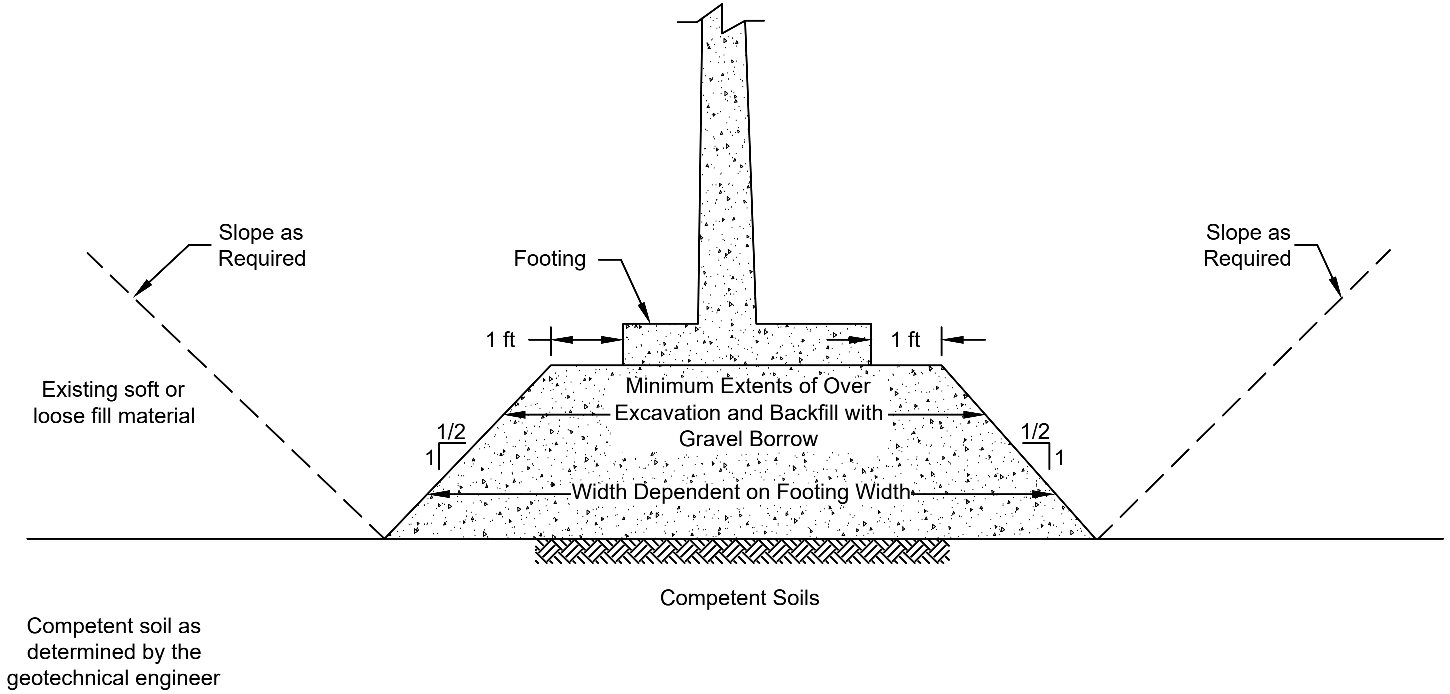

NOTES
1) Depth of overexcavation may vary depending on soil conditions.
2) Temporary slopes will be needed for excavations greater than 4 feet bgs.
3) Gravel borrow must be placed and compacted in accordance with the Geotechnical report.

NOT TO SCALE

Green Hill School Athletic Facility
Chehalis, Washington

Footing Overexcavation Details

19461-00 05/20

HARTCROWSER

Figure
3

APPENDIX A
Field Explorations

APPENDIX A

Field Explorations

General

We evaluated subsurface conditions at the site by advancing three geotechnical borings, eight test pits, and two monitoring wells. The explorations were coordinated by a geologist on our staff, who classified the various soil units encountered, obtained representative soil samples for geotechnical testing, observed and recorded groundwater conditions, and maintained a detailed log of each boring and test pit. Logs of the geotechnical borings and test pits are included in this appendix. Results of the laboratory testing are indicated on the exploration logs and are included in Appendix B.

Materials encountered in the explorations were classified in the field in general accordance with American Society for Testing and Materials (ASTM) Standard Practice D 2488 “Standard Practice for the Classification of Soils (Visual-Manual Procedure).” Disturbed split spoon samples and relatively undisturbed tube samples were collected from the borings. Disturbed (“grab”) samples were collected from sidewalls or excavation spoils during test pit explorations. Sampling intervals are shown on the exploration log included in this appendix.

The exploration logs in this appendix show our interpretation of the exploration, sampling, and testing data. The logs indicate the depth where the soils change. Note that the change may be gradual. In the field, we classified the samples taken from the explorations according to the methods presented on the *Figure A-1 - Key to Exploration Logs*. This figure also provides a legend explaining the symbols and abbreviations used in the logs.

The approximate locations of the explorations are shown on Figure 2 of the report. Explorations were located in the field using a hand-held, mapping-grade, Trimble GPS unit with a horizontal accuracy of approximately 1 to 3 feet.

Geotechnical Borings

Three geotechnical borings were advanced between April 28 and April 30, 2020, using mud-rotary drilling methods with a track-mounted CME-850 drill rig operated by Western States Soil Conservation, Inc. of Hubbard, Oregon. The borings created an initial hole approximately 3.875 inches in diameter. Borings B-1 and B-3 had subsequent installations of monitoring wells and were widened to approximately 6 inches in diameter. Boring B-2 was backfilled to approximately 10 feet below ground surface (bgs) with a cement-bentonite grout then with bentonite chips up to the ground surface in accordance with state of Washington regulations. Monitoring wells in B-1 and B-3 were constructed and backfilled, as described below in the *Monitoring Wells* section of this appendix. The logs of the borings are included in this appendix.

Soil Sampling Procedures

Soil samples were obtained from the borings using the following methods.

- Sampling using a SPT sampler was completed in general conformance with ASTM Test Method D 1586 "Standard Method for Penetration Test and Split-Barrel Sampling of Soils." The sampler was driven with a 140-pound auto-trip hammer falling 30 inches. The sampler was driven a total distance of 18 inches or until refusal criteria was met (greater than 50 blows per 6 inches). The number of blows required to drive the samplers the final 12 inches (the "N" value) is recorded on the exploration logs, unless otherwise noted. All soil samples were placed into watertight bags and delivered to Hart Crowser's laboratory for subsequent classification and testing.

- We also performed sampling with a split-barrel, 3-inch outer-diameter, 2.4-inch inner-diameter modified California sampler. The sampler was also driven with a 140-pound hammer falling 30 inches. The number of blows required to drive the sampler the last 12 inches was correlated to SPT blow counts (N-values), using a Burmister (1948) correction of 64 percent. The corrected blow counts are plotted on the boring logs at their respective sample depths. Disturbed samples were obtained from the split barrel and placed into watertight plastic bags and delivered to Hart Crowser's laboratory for subsequent classification and testing.

- Relatively undisturbed samples were obtained using a thin-walled Shelby tube sampler in general conformance with ASTM Test Method D1587 "Standard Practice for Thin-Walled Tube Sampling of Soils for Geotechnical Purposes." The sampler is driven using the hydraulic down-pressure of the drill rig mast.

Monitoring Wells

Two monitoring wells, MW-1 and MW-2, were installed in borings B-1 and B-3, respectively, to allow long-term groundwater elevation monitoring. The wells consist of a 4-inch-long PVC end cap threaded onto a 2-inch-diameter PVC riser pipe with 2-inch-diameter slotted screened pipe. MW-1 was screened from approximately 34 to 24 feet bgs and MW-2 was screened from approximately 24 to 14 feet bgs. Silica sand was used to fill the annulus surrounding the PVC pipe over the screened length and was extended to approximately 1 to 1.5 feet above the top of the screen. The sand was followed by hydrated bentonite chips from the top of sand in each well, approximately 23 and 13 feet, respectively, to approximately 1 foot bgs. The well head is protected by a surface-mounted monument cast into concrete from approximately 1 foot bgs to the surface.

Test Pits

Eight test pit explorations, designated TP-1 through TP-8, were performed on May 1, 2020. Test pit explorations were completed using a tracked excavator operated by Rivers Edge Environmental Services of Black Diamond, Washington. The explorations were continuously observed by a geologist on our staff, and detailed field logs of the test pits were prepared. Disturbed ("grab") samples were collected from sidewalls or excavation spoils during test pit explorations. Sampling intervals are shown on the exploration logs included in this appendix. The logs are presented at the end of this appendix.

Sample Description

Identification of soils in this report is based on visual field and laboratory observations which include density/consistency, moisture condition, grain size, and plasticity estimates and should not be construed to imply field nor laboratory testing unless presented herein. ASTM D 2488 visual-manual identification methods were used as a guide. Where laboratory testing confirmed visual-manual identifications, then ASTM D 2487 was used to classify the soils.

Relative Density/Consistency

Soil density/consistency in borings is related primarily to the standard penetration resistance (N). Soil density/consistency in test pits and probes is estimated based on visual observation and is presented parenthetically on the logs.

SAND or GRAVEL Relative Density	N (Blows/Foot)	SILT or CLAY Consistency	N (Blows/Foot)
Very loose	0 to 4	Very soft	0 to 1
Loose	5 to 10	Soft	2 to 4
Medium dense	11 to 30	Medium stiff	5 to 8
Dense	31 to 50	Stiff	9 to 15
Very dense	>50	Very stiff	16 to 30
		Hard	>30

Moisture

Dry	Absence of moisture, dusty, dry to the touch
Moist	Damp but no visible water
Wet	Visible free water, usually soil is below water table

USCS Soil Classification Chart (ASTM D 2487)

Major Divisions			Symbols		Typical Descriptions
			Graph	USCS	
Coarse Grained Soils More than 50% of Material Retained on No. 200 Sieve	Gravel and Gravelly Soils More than 50% of Coarse Fraction Retained on No. 4 Sieve	Clean Gravels *(<5% fines)*	▨	GW	Well-Graded Gravel; Well-Graded Gravel with Sand
			▨	GP	Poorly Graded Gravel; Poorly Graded Gravel with Sand
		Gravels *(5-12% fines)*	▨	GW-GM	Well-Graded Gravel with Silt; Well-Graded Gravel with Silt and Sand
			▨	GW-GC	Well-Graded Gravel with Clay; Well-Graded Gravel with Clay and Sand
			▨	GP-GM	Poorly Graded Gravel with Silt; Poorly Graded Gravel with Silt and Sand
			▨	GP-GC	Poorly Graded Gravel with Clay; Poorly Graded Gravel with Clay and Sand
		Gravels with Fines *(>12% fines)*	▨	GM	Silty Gravel; Silty Gravel with Sand
			▨	GC	Clayey Gravel; Clayey Gravel with Sand
	Sand and Sandy Soils More than 50% of Coarse Fraction Passing No. 4 Sieve	Sands with few Fines *(<5% fines)*	▨	SW	Well-Graded Sand; Well-Graded Sand with Gravel
			▨	SP	Poorly Graded Sand; Poorly Graded Sand with Gravel
		Sands *(5-12% fines)*	▨	SW-SM	Well-Graded Sand with Silt Well-Graded Sand with Silt and Gravel
			▨	SW-SC	Well-Graded Sand with Clay; Well-Graded Sand with Clay and Gravel
			▨	SP-SM	Poorly Graded Sand with Silt; Poorly Graded Sand with Silt and Gravel
			▨	SP-SC	Poorly Graded Sand with Clay; Poorly Graded Sand with Clay and Gravel
		Sands with Fines *(>12% fines)*	▨	SM	Silty Sand; Silty Sand with Gravel
			▨	SC	Clayey Sand; Clayey Sand with Gravel
Fine Grained Soils More than 50% of Material Passing No. 200 Sieve	Silts		▨	ML	Silt; Silt with Sand or Gravel; Sandy or Gravelly Silt
			▨	MH	Elastic Silt; Elastic Silt with Sand or Gravel; Sandy or Gravelly Elastic Silt
	Silty Clay *(based on Atterberg Limits)*		▨	CL-ML	Silty Clay; Silty Clay with Sand or Gravel; Gravelly or Sandy Silty Clay
	Clays		▨	CL	Lean Clay; Lean Clay with Sand or Gravel; Sandy or Gravelly Lean Clay
			▨	CH	Fat Clay; Fat Clay with Sand or Gravel; Sandy or Gravelly Fat Clay
	Organics		▨	OL/OH	Organic Soil; Organic Soil with Sand or Gravel; Sandy or Gravelly Organic Soil
Highly Organic *(>50% organic material)*			▨	PT	Peat - Decomposing Vegetation - Fibrous to Amorphous Texture

Minor Constituents

	Estimated Percentage
Sand, Gravel	
Trace	<5
Few	5 - 15
Cobbles, Boulders	
Trace	<5
Few	5 - 10
Little	15 - 25
Some	30 - 45

Soil Test Symbols

%F	Percent Passing No. 200 Sieve
AL	Atterberg Limits (%)

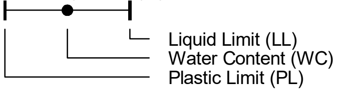

CA	Chemical Analysis
CAUC	Consolidated Anisotropic Undrained Compression
CAUE	Consolidated Anisotropic Undrained Extension
CBR	California Bearing Ratio
CIDC	Consolidated Drained Isotropic Triaxial Compression
CIUC	Consolidated Isotropic Undrained Compression
CK0DC	Consolidated Drained k0 Triaxial Compression
CK0DSS	Consolidated k0 Undrained Direct Simple Shear
CK0UC	Consolidated k0 Undrained Compression
CK0UE	Consolidated k0 Undrained Extension
CRSCN	Constant Rate of Strain Consolidation
DS	Direct Shear
DSS	Direct Simple Shear
DT	In Situ Density
GS	Grain Size Classification
HYD	Hydrometer
ILCN	Incremental Load Consolidation
K0CN	k0 Consolidation
kc	Constant Head Permeability
kf	Falling Head Permeability
MD	Moisture Density Relationship
OC	Organic Content
OT	Tests by Others
P	Pressuremeter
PID	Photoionization Detector Reading
PP	Pocket Penetrometer
SG	Specific Gravity
TRS	Torsional Ring Shear
TV	Torvane
UC	Unconfined Compression
UUC	Unconsolidated Undrained Triaxial Compression
VS	Vane Shear
WC	Water Content (%)

Groundwater Indicators

▽	Groundwater Level on Date or At Time of Drilling (ATD)
▼	Groundwater Level on Date Measured in Piezometer
○	Groundwater Seepage (Test Pits)

Sample Symbols

☒ 1.5" I.D. Split Spoon	■ Rock Core Run	☒ Grab
◩ 3.25" O.D. Split Spoon	▨ Sonic Core	▥ Cuttings
◧ Modified California Sampler	◫ Thin-walled Sampler	▨ Push Probe

Well Symbols

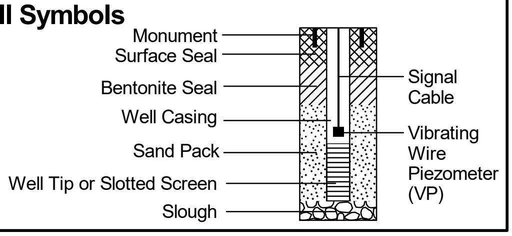

HARTCROWSER

Project: Green Hill School Athletic Facility
Location: Chehalis, Washington
Project No.: 19461-00

Key to Exploration Logs

Figure **A-1**
Sheet **1 of 1**

Date Started: 4/28/20
Date Completed: 4/28/20
Logged by: R. Rosenberg
Checked by: D. Knapp
Location: Lat: 46.651020 Long: -122.959001 (WGS 84)
Ground Surface Elevation: 188.6 feet (NAVD 88)
Comments: Well Tag ID: BJC 769

Drilling Contractor/Crew: Western States Soil Conservation, Inc. / Jeff Christman
Drilling Method: Mud Rotary
Rig Model/Type: CME-850 XR / Track-mounted drill rig
Hammer Type: Auto-hammer
Hammer Weight (pounds): 140
Hammer Drop Height (inches): 30
Measured Hammer Efficiency (%): 80.4
Hole Diameter: 6 inches
Casing Diameter: ID: 2 inches
Total Depth: 35.2 feet
Depth to Groundwater: 4.45 feet

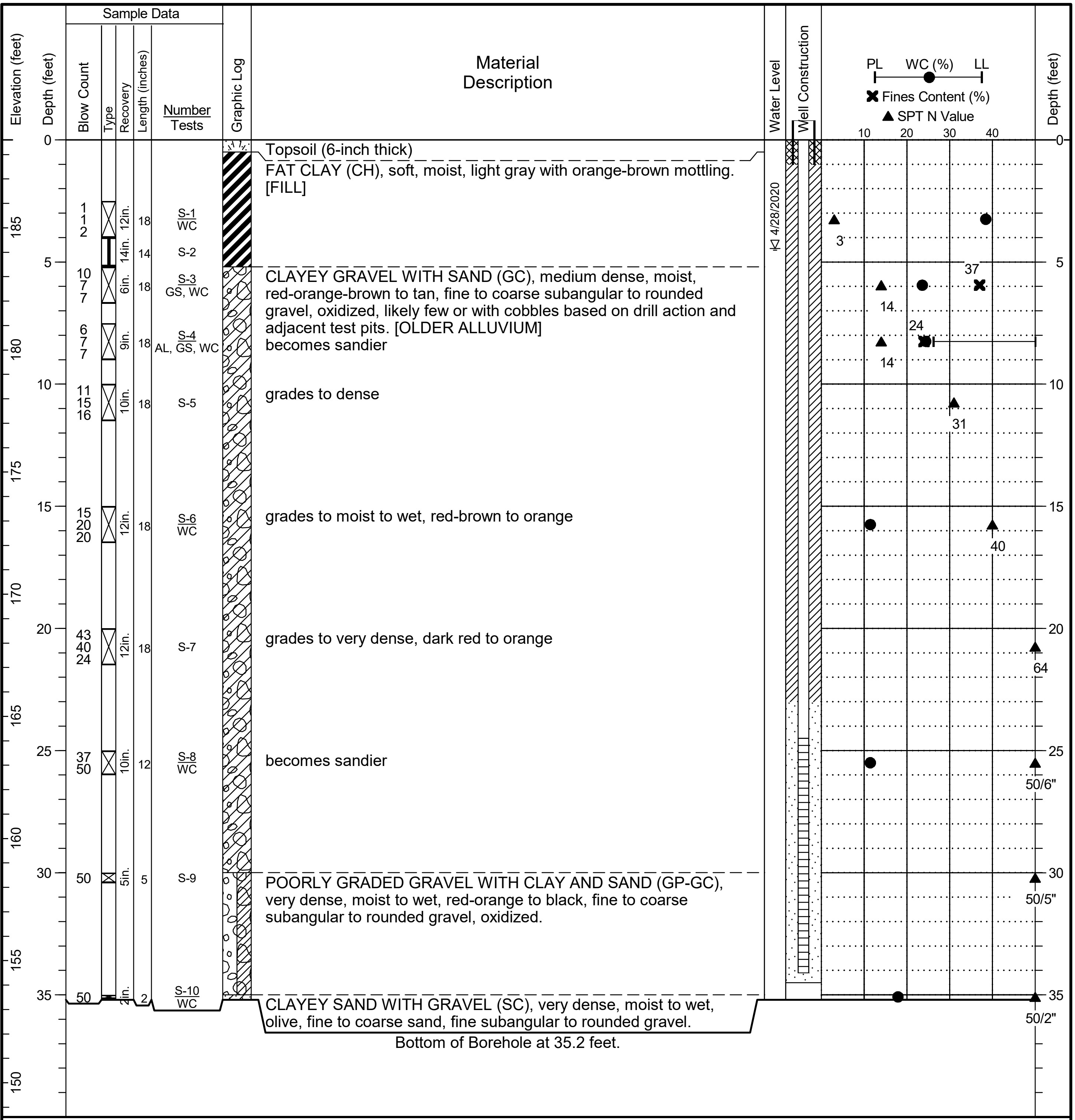

Depth (feet)	Blow Count	Recovery	Length (inches)	Number / Tests
	1 1 2	12in.	18	S-1 WC
5		14in.	14	S-2
	10 7 7	6in.	18	S-3 GS, WC
	6 7 7	9in.	18	S-4 AL, GS, WC
10	11 15 16	10in.	18	S-5
15	15 20 20	12in.	18	S-6 WC
20	43 40 24	12in.	18	S-7
25	37 50	10in.	12	S-8 WC
30	50	5in.	5	S-9
35	50	2in.	2	S-10 WC

Material Description

Topsoil (6-inch thick)

FAT CLAY (CH), soft, moist, light gray with orange-brown mottling. [FILL]

CLAYEY GRAVEL WITH SAND (GC), medium dense, moist, red-orange-brown to tan, fine to coarse subangular to rounded gravel, oxidized, likely few or with cobbles based on drill action and adjacent test pits. [OLDER ALLUVIUM]

becomes sandier

grades to dense

grades to moist to wet, red-brown to orange

grades to very dense, dark red to orange

becomes sandier

POORLY GRADED GRAVEL WITH CLAY AND SAND (GP-GC), very dense, moist to wet, red-orange to black, fine to coarse subangular to rounded gravel, oxidized.

CLAYEY SAND WITH GRAVEL (SC), very dense, moist to wet, olive, fine to coarse sand, fine subangular to rounded gravel.

Bottom of Borehole at 35.2 feet.

General Notes:
1. Refer to Figure A-1 for explanation of descriptions and symbols.
2. Material stratum lines are interpretive and actual changes may be gradual. Solid lines indicate distinct contacts and dashed lines indicate gradual or approximate contacts.
3. USCS designations are based on visual-manual identification (ASTM D 2488), unless otherwise supported by laboratory testing (ASTM D 2487).
4. Groundwater level, if indicated, is at time of drilling/excavation (ATD) or for date specified. Level may vary with time.
5. Location and ground surface elevations are approximate.

Date Started: 4/29/20
Date Completed: 4/29/20
Logged by: R. Rosenberg
Checked by: D. Knapp
Location: Lat: 46.650706 Long: -122.958853 (WGS 84)
Ground Surface Elevation: 188.8 feet (NAVD 88)
Comments: Blow counts for >1.5" split spoon adjusted to approximate SPT N-values (see report text).

Drilling Contractor/Crew: Western States Soil Conservation, Inc. / Jeff Christman
Drilling Method: Mud Rotary
Rig Model/Type: CME-850 XR / Track-mounted drill rig
Hammer Type: Auto-hammer
Hammer Weight (pounds): 140
Hammer Drop Height (inches): 30
Measured Hammer Efficiency (%): 80.4
Hole Diameter: 3.875 inches
Casing Diameter: NA
Total Depth: 51.5 feet
Depth to Groundwater: Not Identified

Sample Data

Blow Count	Recovery	Length (inches)	Number Tests
0 1 2	18in.	18	S-1 AL, WC
12 13 16	14in.	18	S-2
3 10 19	10in.	18	S-3 GS, WC
16 9 8	10in.	18	S-4 GS, WC
15 20 21	8in.	18	S-5
27 50	8in.	11	S-6
17 18 15	12in.	18	S-7 WC
50	3in.	3	S-8
4 38 50	12in.	18	S-8re
3 50	9in.	10	S-9

Material Description

Topsoil (6-inch thick)

FAT CLAY (CH), trace fine to medium sand, soft, moist, light green-gray with orange-brown mottling, scattered rootlets. [FILL]

CLAYEY GRAVEL WITH SAND (GC), medium dense, moist, gray to orange-yellow-brown, fine to coarse subangular to rounded gravel, oxidized, likely few or with cobbles based on drill action and adjacent test pits. [OLDER ALLUVIUM]

SILTY SAND (SM), medium dense, moist to wet, dark red-brown, fine to medium sand, trace coarse sand.

minor chatter 13 to 15'

CLAYEY GRAVEL WITH SAND (GC), dense, moist to wet, red-brown to yellow-brown, fine to coarse subangular to rounded gravel.

grades to very dense

grades to dense

grades to very dense

grades to moist to wet, olive

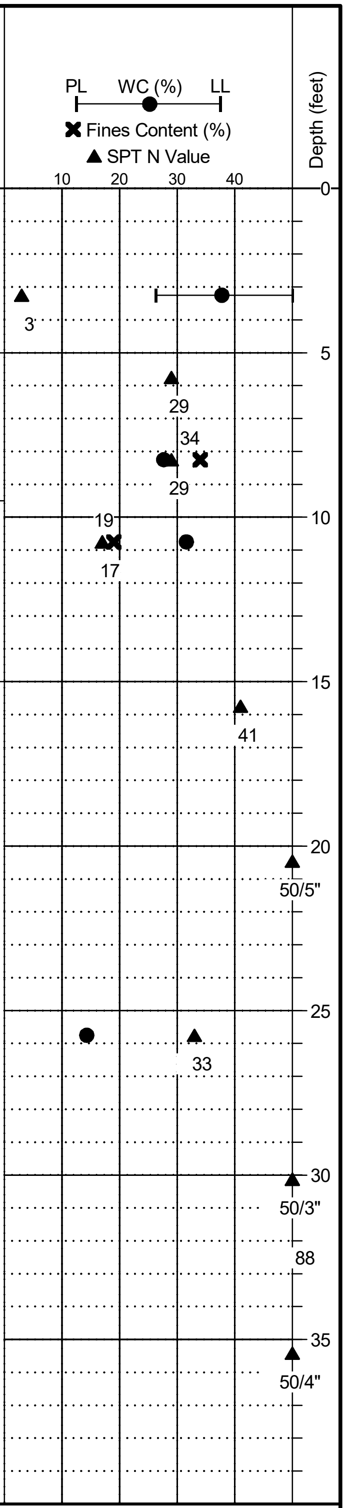

General Notes:
1. Refer to Figure A-1 for explanation of descriptions and symbols.
2. Material stratum lines are interpretive and actual changes may be gradual. Solid lines indicate distinct contacts and dashed lines indicate gradual or approximate contacts.
3. USCS designations are based on visual-manual identification (ASTM D 2488), unless otherwise supported by laboratory testing (ASTM D 2487).
4. Groundwater level, if indicated, is at time of drilling/excavation (ATD) or for date specified. Level may vary with time.
5. Location and ground surface elevations are approximate.

HARTCROWSER

Project: Green Hill School Athletic Facility
Location: Chehalis, Washington
Project No.: 19461-00

Boring Log
B-2

Figure **A-3**
Sheet **1 of 2**

Date Started: 4/29/20
Date Completed: 4/29/20
Logged by: R. Rosenberg
Checked by: D. Knapp
Location: Lat: 46.650706 Long: -122.958853 (WGS 84)
Ground Surface Elevation: 188.8 feet (NAVD 88)
Comments: Blow counts for >1.5" split spoon adjusted to approximate SPT N-values (see report text).

Drilling Contractor/Crew: Western States Soil Conservation, Inc. / Jeff Christman
Drilling Method: Mud Rotary
Rig Model/Type: CME-850 XR / Track-mounted drill rig
Hammer Type: Auto-hammer
Hammer Weight (pounds): 140
Hammer Drop Height (inches): 30
Measured Hammer Efficiency (%): 80.4
Hole Diameter: 3.875 inches
Casing Diameter: NA
Total Depth: 51.5 feet
Depth to Groundwater: Not Identified

Elevation (feet)	Depth (feet)	Sample Data: Blow Count	Type	Recovery	Length (inches)	Number / Tests	Graphic Log	Material Description
	40	14 30 44		12in.	18	S-10 / WC		CLAYEY SAND WITH GRAVEL (SC), very dense, moist to wet, olive, mostly fine subangular to rounded gravel.
145	45	50		5in.	5	S-11		CLAYEY GRAVEL WITH SAND (GC), very dense, moist to wet, fine to coarse subangular to rounded gravel.
140	50	11 16 26		18in.	18	S-12 / WC		SILTY SAND (SM), dense, moist, dark green-gray, fine sand, laminated. [COMPLETELY DECOMPOSED LINCOLN CREEK FORMATION?]

Bottom of Borehole at 51.5 feet.

Elevation (feet)	Depth (feet)
135	55
130	60
125	65
120	70
115	75
110	

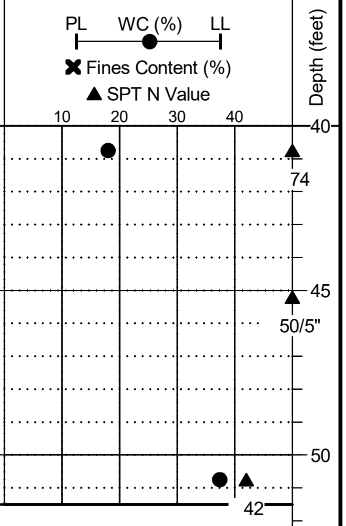

General Notes:
1. Refer to Figure A-1 for explanation of descriptions and symbols.
2. Material stratum lines are interpretive and actual changes may be gradual. Solid lines indicate distinct contacts and dashed lines indicate gradual or approximate contacts.
3. USCS designations are based on visual-manual identification (ASTM D 2488), unless otherwise supported by laboratory testing (ASTM D 2487).
4. Groundwater level, if indicated, is at time of drilling/excavation (ATD) or for date specified. Level may vary with time.
5. Location and ground surface elevations are approximate.

HARTCROWSER

Project: Green Hill School Athletic Facility
Location: Chehalis, Washington
Project No.: 19461-00

Boring Log
B-2

Figure **A-3**
Sheet **2 of 2**

HC BORING LOG - F:\GINT\HC_LIBRARY.GLB - 5/26/20 11:35 - \\SEAFS\PROJECTS\NOTEBOOKS\1946100_GREEN_HILL_SCHOOL_ATHLETIC_FACILITY\FIELD DATA\PERM_GINT FILES\1946100_EXPLORATIONS.GPJ - danielknapp

Date Started: 4/29/20
Date Completed: 4/30/20
Logged by: R. Rosenberg
Checked by: D. Knapp
Location: Lat: 46.650332 Long: -122.958652 (WGS 84)
Ground Surface Elevation: 188.9 feet (NAVD 88)
Comments: Well Tag ID: BJC 770

Drilling Contractor/Crew: Western States Soil Conservation, Inc. / Jeff Christman
Drilling Method: Mud Rotary
Rig Model/Type: CME-850 XR / Track-mounted drill rig
Hammer Type: Auto-hammer
Hammer Weight (pounds): 140
Hammer Drop Height (inches): 30
Measured Hammer Efficiency (%): 80.4
Hole Diameter: 3.875 inches
Casing Diameter: ID: 2 inches
Total Depth: 26.5 feet
Depth to Groundwater: 6.09 feet

Sample Data

Blow Count	Type	Recovery	Length (inches)	Number Tests
2 1 8	☒	12in.	18	S-1a S-1b
15 12 11	☒	1in.	18	S-2
17 11 17	☒	8in.	18	S-3 GS, WC
18 15 15	☒	14in.	18	S-4 GS, WC
28 27 13	☒	12in.	18	S-5 WC
36 30 24	☒	12in.	18	S-6
37 50	☒	10in.	10	S-7

Material Description

Topsoil (6-inch thick)

FAT CLAY (CH), trace fine to medium sand, soft, moist, light gray with orange-brown mottling. [FILL]

GRAVELLY FAT CLAY (CH), stiff, moist, light gray to yellow-brown, fine gravel.

CLAYEY GRAVEL WITH SAND (GC), medium dense, moist, red-brown to yellow-brown to black, fine to coarse subangular to rounded gravel, oxidized, likely few or with cobbles based on drill action and adjacent test pits. [OLDER ALLUVIUM]

SILTY SAND WITH GRAVEL (SM), medium dense, moist to wet, red-brown to dark red-brown, fine to coarse sand, fine to coarse angular to rounded gravel, oxidized.

grades to dense

CLAYEY GRAVEL WITH SAND (GC), very dense, moist to wet, red-brown to orange-brown, fine to coarse angular to rounded gravel, oxidized.

Bottom of Borehole at 26.5 feet.

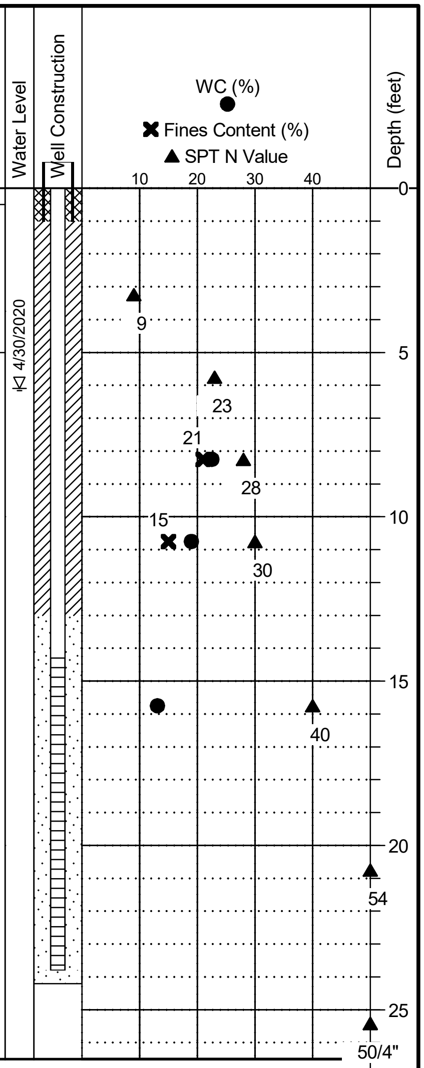

Elevation (feet): 185, 180, 175, 170, 165, 160, 155, 150
Depth (feet): 0, 5, 10, 15, 20, 25, 30, 35

General Notes:
1. Refer to Figure A-1 for explanation of descriptions and symbols.
2. Material stratum lines are interpretive and actual changes may be gradual. Solid lines indicate distinct contacts and dashed lines indicate gradual or approximate contacts.
3. USCS designations are based on visual-manual identification (ASTM D 2488), unless otherwise supported by laboratory testing (ASTM D 2487).
4. Groundwater level, if indicated, is at time of drilling/excavation (ATD) or for date specified. Level may vary with time.
5. Location and ground surface elevations are approximate.

HARTCROWSER

Project: Green Hill School Athletic Facility
Location: Chehalis, Washington
Project No.: 19461-00

Boring and Monitoring Well Log
B-3/MW-2

Figure **A-4**
Sheet **1 of 1**

Date Started: 5/1/20
Date Completed: 5/1/20
Contractor/Crew: Rivers Edge Environmental Services / Robert McMeyer
Logged by: R. Rosenberg
Checked by: D. Knapp
Rig Model/Type: Volvo 160 / Excavator
Location: Lat: 46.650088 Long: -122.960475 (WGS 84)
Total Depth: 12 feet
Depth to Seepage: 11 feet
Ground Surface Elevation: 185.4 feet (NAVD 88)
Comments:

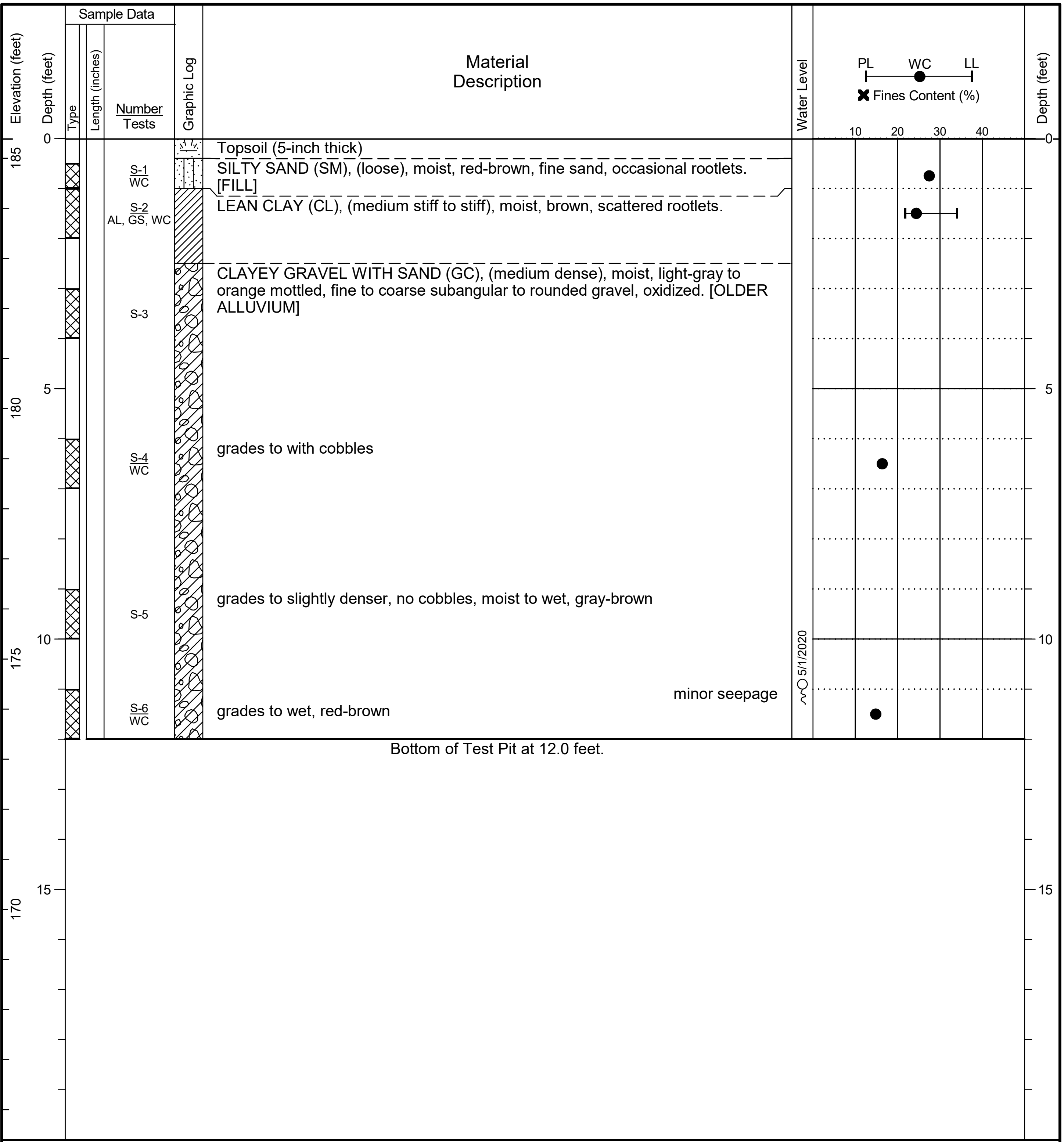

Number Tests	
S-1	WC
S-2	AL, GS, WC
S-3	
S-4	WC
S-5	
S-6	WC

Material Description

Topsoil (5-inch thick)

SILTY SAND (SM), (loose), moist, red-brown, fine sand, occasional rootlets. [FILL]

LEAN CLAY (CL), (medium stiff to stiff), moist, brown, scattered rootlets.

CLAYEY GRAVEL WITH SAND (GC), (medium dense), moist, light-gray to orange mottled, fine to coarse subangular to rounded gravel, oxidized. [OLDER ALLUVIUM]

grades to with cobbles

grades to slightly denser, no cobbles, moist to wet, gray-brown

minor seepage

grades to wet, red-brown

Bottom of Test Pit at 12.0 feet.

General Notes:
1. Refer to Figure A-1 for explanation of descriptions and symbols.
2. Material stratum lines are interpretive and actual changes may be gradual. Solid lines indicate distinct contacts and dashed lines indicate gradual or approximate contacts.
3. USCS designations are based on visual-manual identification (ASTM D 2488), unless otherwise supported by laboratory testing (ASTM D 2487).
4. Groundwater level, if indicated, is at time of drilling/excavation (ATD) or for date specified. Level may vary with time.
5. Location and ground surface elevations are approximate.

HARTCROWSER

Project: Green Hill School Athletic Facility
Location: Chehalis, Washington
Project No.: 19461-00

Test Pit Log
TP-1

Figure **A-5**
Sheet **1 of 1**

Date Started: 5/1/20
Date Completed: 5/1/20
Contractor/Crew: Rivers Edge Environmental Services / Robert McMeyer
Logged by: R. Rosenberg
Checked by: D. Knapp
Rig Model/Type: Volvo 160 / Excavator
Location: Lat: 46.650424 Long: -122.958494 (WGS 84)
Total Depth: 14 feet
Depth to Seepage: 12 feet
Ground Surface Elevation: 188.8 feet (NAVD 88)
Comments:

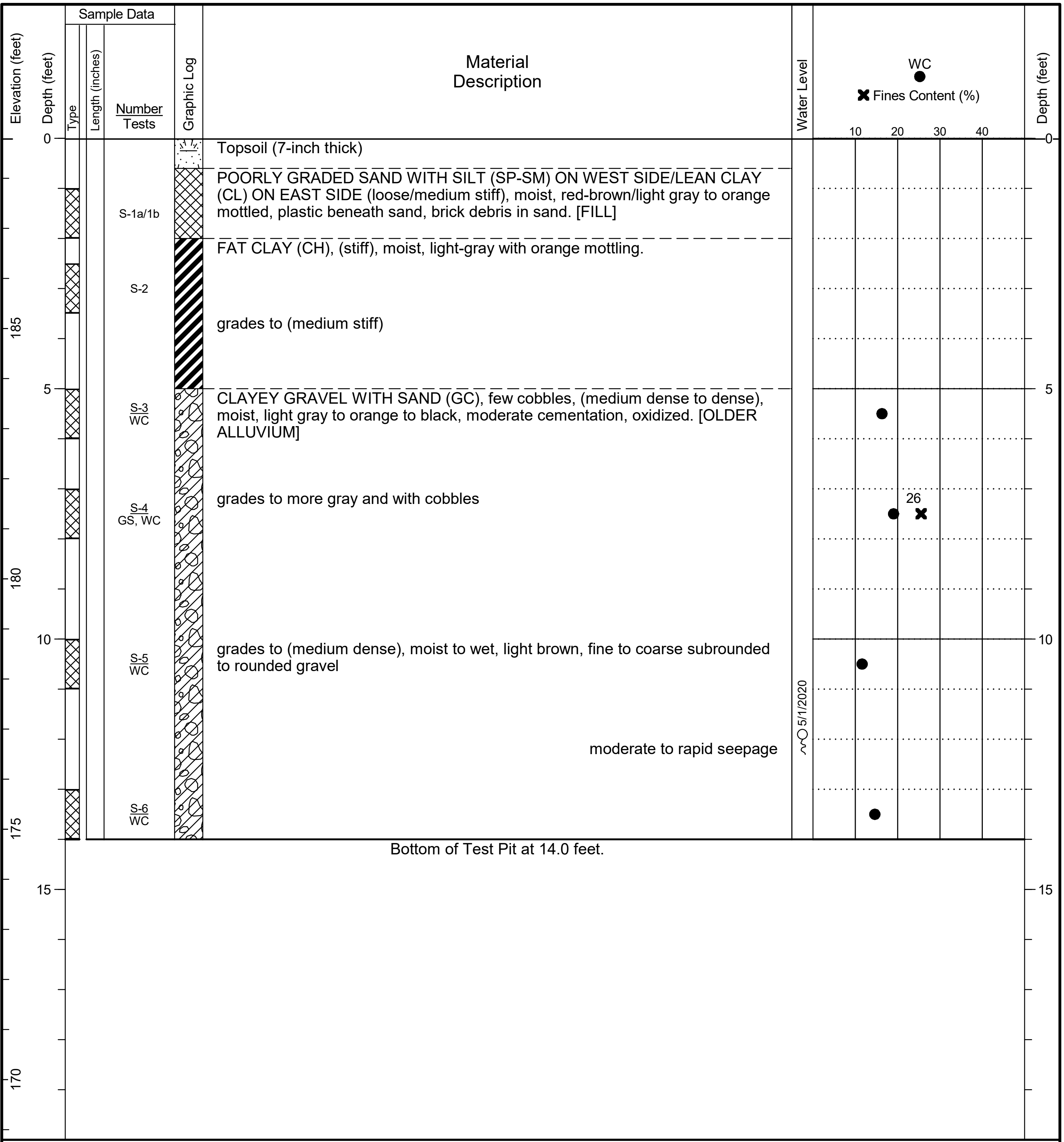

Topsoil (7-inch thick)

POORLY GRADED SAND WITH SILT (SP-SM) ON WEST SIDE/LEAN CLAY (CL) ON EAST SIDE (loose/medium stiff), moist, red-brown/light gray to orange mottled, plastic beneath sand, brick debris in sand. [FILL]

FAT CLAY (CH), (stiff), moist, light-gray with orange mottling.

grades to (medium stiff)

CLAYEY GRAVEL WITH SAND (GC), few cobbles, (medium dense to dense), moist, light gray to orange to black, moderate cementation, oxidized. [OLDER ALLUVIUM]

grades to more gray and with cobbles

grades to (medium dense), moist to wet, light brown, fine to coarse subrounded to rounded gravel

moderate to rapid seepage

Bottom of Test Pit at 14.0 feet.

General Notes:

1. Refer to Figure A-1 for explanation of descriptions and symbols.
2. Material stratum lines are interpretive and actual changes may be gradual. Solid lines indicate distinct contacts and dashed lines indicate gradual or approximate contacts.
3. USCS designations are based on visual-manual identification (ASTM D 2488), unless otherwise supported by laboratory testing (ASTM D 2487).
4. Groundwater level, if indicated, is at time of drilling/excavation (ATD) or for date specified. Level may vary with time.
5. Location and ground surface elevations are approximate.

HARTCROWSER

Project: Green Hill School Athletic Facility
Location: Chehalis, Washington
Project No.: 19461-00

Test Pit Log
TP-2

Figure **A-6**
Sheet **1 of 1**

Date Started: 5/1/20 Date Completed: 5/1/20 Contractor/Crew: Rivers Edge Environmental Services / Robert McMeyer
Logged by: R. Rosenberg Checked by: D. Knapp Rig Model/Type: Volvo 160 / Excavator
Location: Lat: 46.650923 Long: -122.959312 (WGS 84) Total Depth: 14 feet Depth to Seepage: 13 feet
Ground Surface Elevation: 189.0 feet (NAVD 88)
Comments:

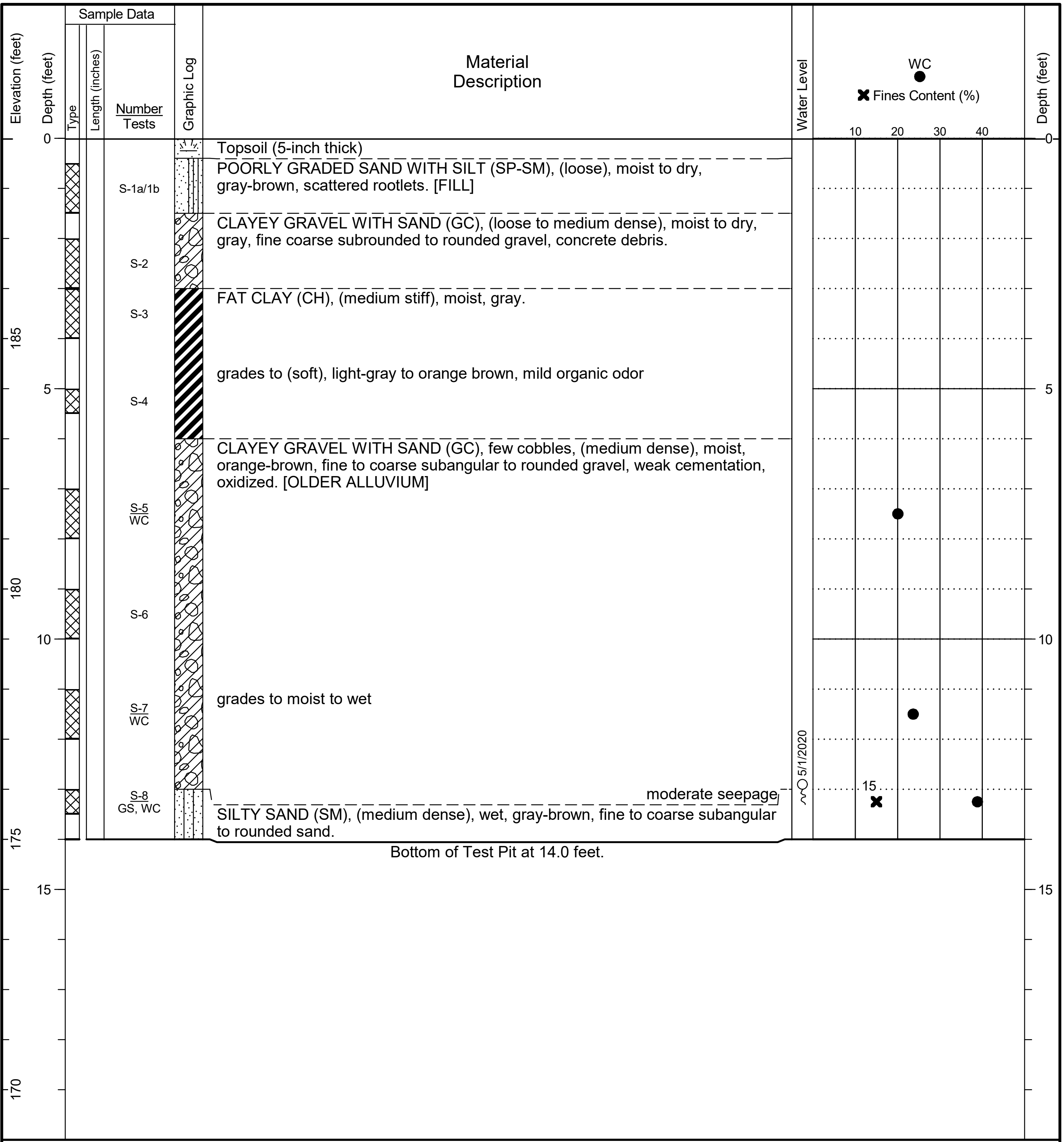

Topsoil (5-inch thick)

POORLY GRADED SAND WITH SILT (SP-SM), (loose), moist to dry, gray-brown, scattered rootlets. [FILL]

CLAYEY GRAVEL WITH SAND (GC), (loose to medium dense), moist to dry, gray, fine coarse subrounded to rounded gravel, concrete debris.

FAT CLAY (CH), (medium stiff), moist, gray.

grades to (soft), light-gray to orange brown, mild organic odor

CLAYEY GRAVEL WITH SAND (GC), few cobbles, (medium dense), moist, orange-brown, fine to coarse subangular to rounded gravel, weak cementation, oxidized. [OLDER ALLUVIUM]

grades to moist to wet

moderate seepage

SILTY SAND (SM), (medium dense), wet, gray-brown, fine to coarse subangular to rounded sand.

Bottom of Test Pit at 14.0 feet.

General Notes:
1. Refer to Figure A-1 for explanation of descriptions and symbols.
2. Material stratum lines are interpretive and actual changes may be gradual. Solid lines indicate distinct contacts and dashed lines indicate gradual or approximate contacts.
3. USCS designations are based on visual-manual identification (ASTM D 2488), unless otherwise supported by laboratory testing (ASTM D 2487).
4. Groundwater level, if indicated, is at time of drilling/excavation (ATD) or for date specified. Level may vary with time.
5. Location and ground surface elevations are approximate.

HC TEST PIT - F:\GINT\HC_LIBRARY.GLB - 5/26/20 11:41 - \\SEAFS\PROJECTS\NOTEBOOKS\1946100_GREEN_HILL_SCHOOL_ATHLETIC_FACILITY\FIELD DATA\PERM_GINT FILES\1946100_EXPLORATIONS.GPJ - danielknapp

HARTCROWSER

Project: Green Hill School Athletic Facility
Location: Chehalis, Washington
Project No.: 19461-00

Test Pit Log
TP-3

Figure **A-7**
Sheet **1 of 1**

Date Started: 5/1/20
Date Completed: 5/1/20
Contractor/Crew: Rivers Edge Environmental Services / Robert McMeyer
Logged by: R. Rosenberg
Checked by: D. Knapp
Rig Model/Type: Volvo 160 / Excavator
Location: Lat: 46.650133 Long: -122.959155 (WGS 84)
Total Depth: 10 feet
Depth to Seepage: Not Encountered
Ground Surface Elevation: 188.7 feet (NAVD 88)
Comments:

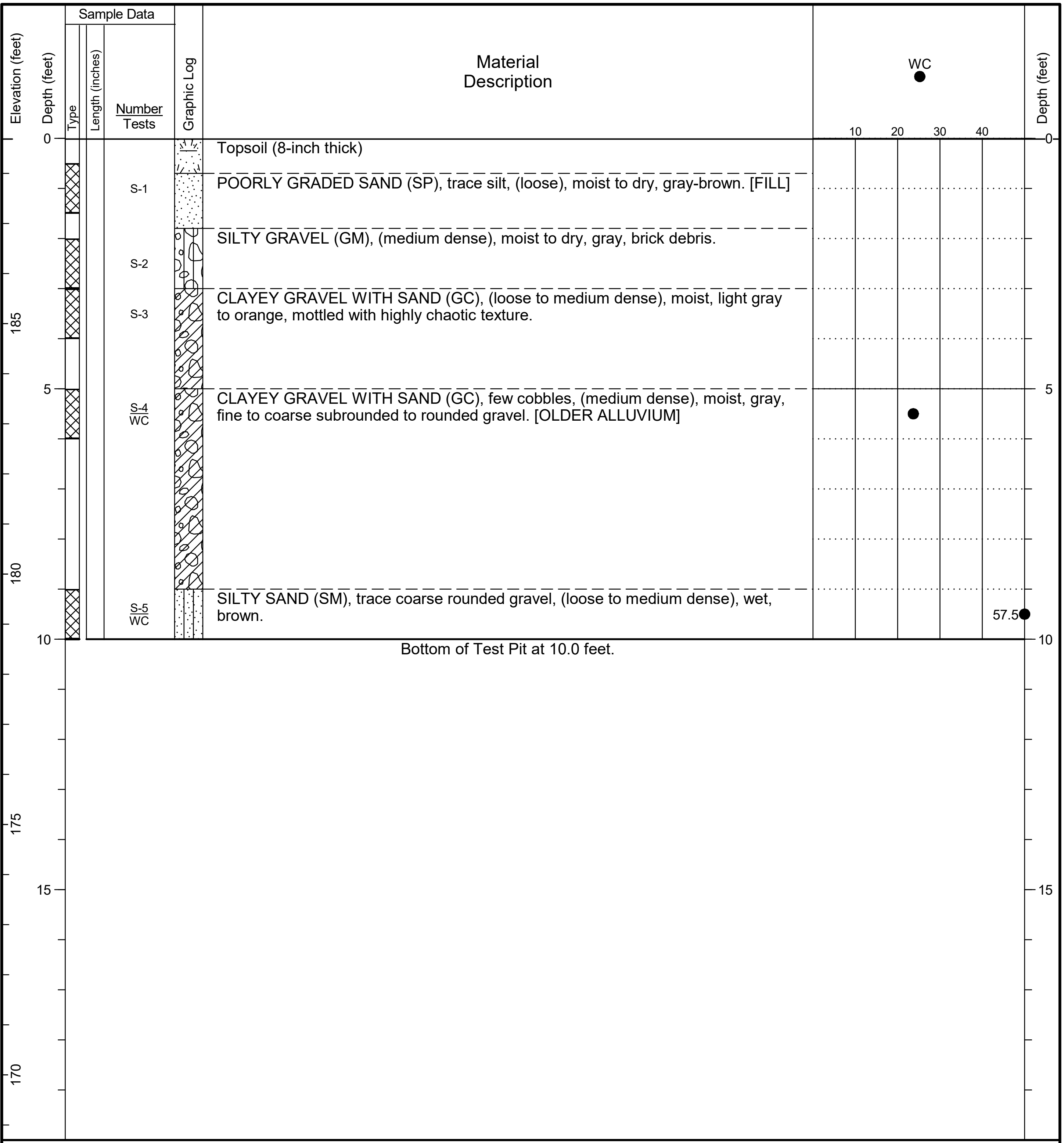

Material Description

Topsoil (8-inch thick)

POORLY GRADED SAND (SP), trace silt, (loose), moist to dry, gray-brown. [FILL]

SILTY GRAVEL (GM), (medium dense), moist to dry, gray, brick debris.

CLAYEY GRAVEL WITH SAND (GC), (loose to medium dense), moist, light gray to orange, mottled with highly chaotic texture.

CLAYEY GRAVEL WITH SAND (GC), few cobbles, (medium dense), moist, gray, fine to coarse subrounded to rounded gravel. [OLDER ALLUVIUM]

SILTY SAND (SM), trace coarse rounded gravel, (loose to medium dense), wet, brown.

Bottom of Test Pit at 10.0 feet.

General Notes:
1. Refer to Figure A-1 for explanation of descriptions and symbols.
2. Material stratum lines are interpretive and actual changes may be gradual. Solid lines indicate distinct contacts and dashed lines indicate gradual or approximate contacts.
3. USCS designations are based on visual-manual identification (ASTM D 2488), unless otherwise supported by laboratory testing (ASTM D 2487).
4. Groundwater level, if indicated, is at time of drilling/excavation (ATD) or for date specified. Level may vary with time.
5. Location and ground surface elevations are approximate.

HC TEST PIT - F:\GINT\HC_LIBRARY.GLB - 5/26/20 11:41 - \\SEAFS\PROJECTS\NOTEBOOKS\1946100_GREEN_HILL_SCHOOL_ATHLETIC_FACILITY\FIELD DATA\PERM_GINT FILES\1946100_EXPLORATIONS.GPJ - danielknapp

HARTCROWSER

Project: Green Hill School Athletic Facility
Location: Chehalis, Washington
Project No.: 19461-00

Test Pit Log
TP-4

Figure **A-8**
Sheet **1 of 1**

Date Started: 5/1/20
Date Completed: 5/1/20
Contractor/Crew: Rivers Edge Environmental Services / Robert McMeyer
Logged by: R. Rosenberg
Checked by: D. Knapp
Rig Model/Type: Volvo 160 / Excavator
Location: Lat: 46.651066 Long: -122.959842 (WGS 84)
Total Depth: 11 feet
Depth to Seepage: 9.5 feet
Ground Surface Elevation: 186.4 feet (NAVD 88)
Comments:

Elevation (feet)	Depth (feet)	Sample Data Number Tests	Material Description	Water Level
	0		Topsoil (8-inch thick)	
185		S-1	FAT CLAY WITH SAND (CH), trace fine gravel, (stiff), moist, light brown to yellow brown, scattered glass and charcoal. [FILL]	
		S-2 WC	FAT CLAY (CH), (medium stiff), moist, light brown to light gray, trace organics (rootlets). grades to soft	
		S-3		
		S-4	GRAVELLY FAT CLAY (GC), (medium stiff to stiff), moist, gray to orange. [OLDER ALLUVIUM]	
	5		CLAYEY GRAVEL WITH SAND AND COBBLES (GC), (medium dense), moist, light gray to yellow-brown, fine to coarse subrounded to rounded gravel, oxidized.	
180		S-5 WC		
		S-6	grades to moist to wet	
			minor seepage	~○ 5/1/2020
	10	S-7	grades to sandier	

Bottom of Test Pit at 11.0 feet.

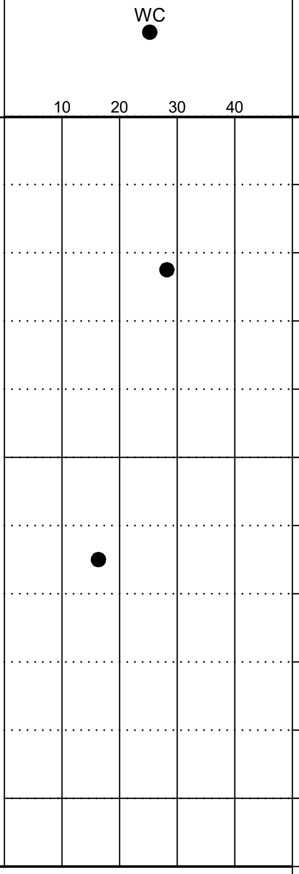

Depth (feet): 0, 5, 10, 15
Elevation (feet): 185, 180, 175, 170

General Notes:
1. Refer to Figure A-1 for explanation of descriptions and symbols.
2. Material stratum lines are interpretive and actual changes may be gradual. Solid lines indicate distinct contacts and dashed lines indicate gradual or approximate contacts.
3. USCS designations are based on visual-manual identification (ASTM D 2488), unless otherwise supported by laboratory testing (ASTM D 2487).
4. Groundwater level, if indicated, is at time of drilling/excavation (ATD) or for date specified. Level may vary with time.
5. Location and ground surface elevations are approximate.

HARTCROWSER

Project: Green Hill School Athletic Facility
Location: Chehalis, Washington
Project No.: 19461-00

Test Pit Log
TP-5

Figure **A-9**
Sheet **1 of 1**

Date Started: 5/1/20
Date Completed: 5/1/20
Contractor/Crew: Rivers Edge Environmental Services / Robert McMeyer
Logged by: R. Rosenberg
Checked by: D. Knapp
Rig Model/Type: Volvo 160 / Excavator
Location: Lat: 46.650689 Long: -122.960935 (WGS 84)
Total Depth: 7 feet
Depth to Seepage: Not Encountered
Ground Surface Elevation: 187.9 feet (NAVD 88)
Comments:

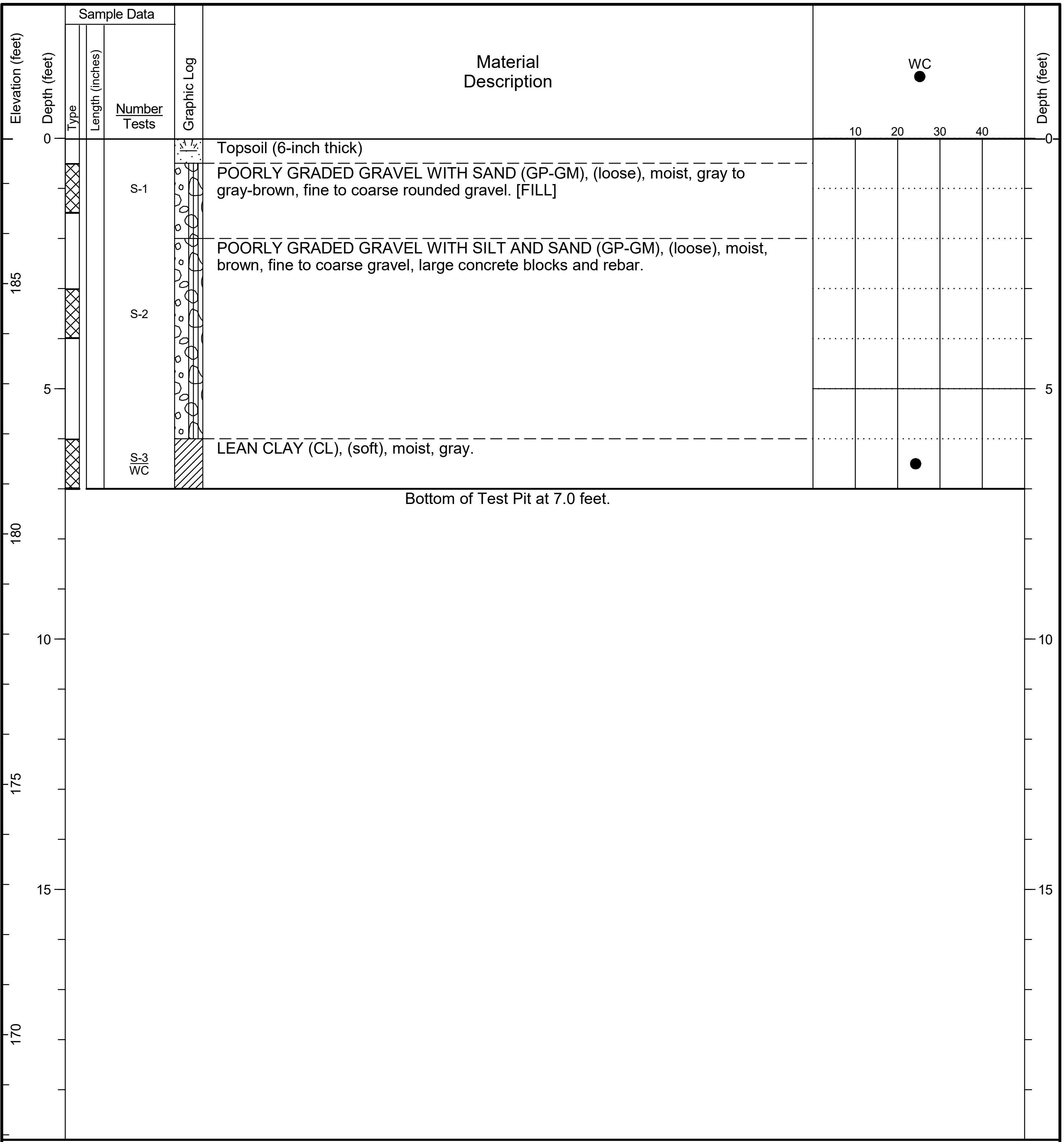

Topsoil (6-inch thick)

POORLY GRADED GRAVEL WITH SAND (GP-GM), (loose), moist, gray to gray-brown, fine to coarse rounded gravel. [FILL]

POORLY GRADED GRAVEL WITH SILT AND SAND (GP-GM), (loose), moist, brown, fine to coarse gravel, large concrete blocks and rebar.

LEAN CLAY (CL), (soft), moist, gray.

Bottom of Test Pit at 7.0 feet.

General Notes:

1. Refer to Figure A-1 for explanation of descriptions and symbols.
2. Material stratum lines are interpretive and actual changes may be gradual. Solid lines indicate distinct contacts and dashed lines indicate gradual or approximate contacts.
3. USCS designations are based on visual-manual identification (ASTM D 2488), unless otherwise supported by laboratory testing (ASTM D 2487).
4. Groundwater level, if indicated, is at time of drilling/excavation (ATD) or for date specified. Level may vary with time.
5. Location and ground surface elevations are approximate.

HARTCROWSER

Project: Green Hill School Athletic Facility
Location: Chehalis, Washington
Project No.: 19461-00

Test Pit Log
TP-6

Figure **A-10**
Sheet **1 of 1**

HC TEST PIT - F:\GINT\HC_LIBRARY.GLB - 5/26/20 11:42 - \\SEAFS\PROJECTS\NOTEBOOKS\1946100_GREEN_HILL_SCHOOL_ATHLETIC_FACILITY\FIELD DATA\PERM_GINT FILES\1946100_EXPLORATIONS.GPJ - danielknapp

Date Started: 5/1/20
Date Completed: 5/1/20
Contractor/Crew: Rivers Edge Environmental Services / Robert McMeyer
Logged by: R. Rosenberg
Checked by: D. Knapp
Rig Model/Type: Volvo 160 / Excavator
Location: Lat: 46.649452 Long: -122.959921 (WGS 84)
Total Depth: 10 feet
Depth to Seepage: Not Encountered
Ground Surface Elevation: 193.3 feet (NAVD 88)
Comments:

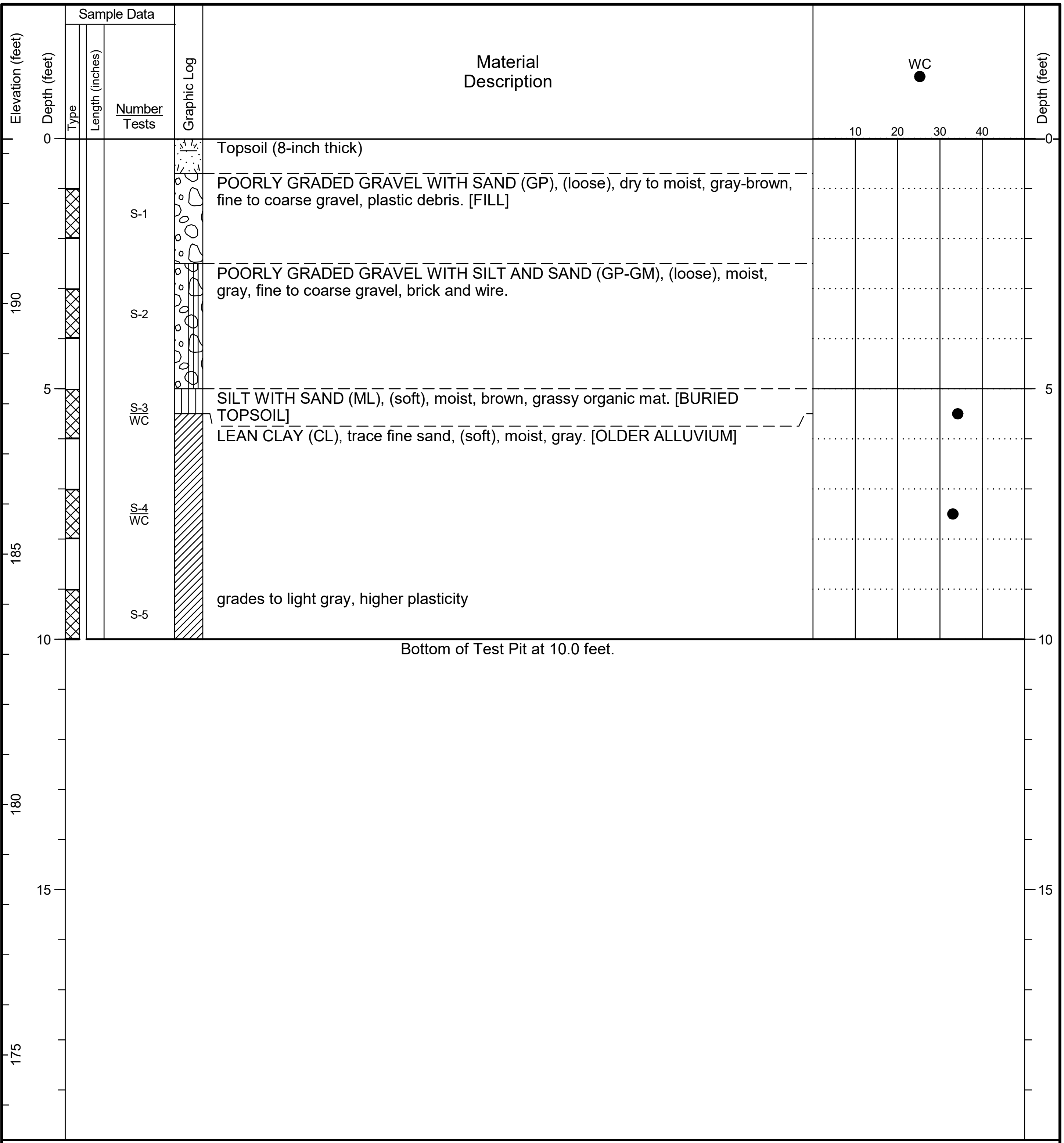

Material Description

Topsoil (8-inch thick)

POORLY GRADED GRAVEL WITH SAND (GP), (loose), dry to moist, gray-brown, fine to coarse gravel, plastic debris. [FILL]

POORLY GRADED GRAVEL WITH SILT AND SAND (GP-GM), (loose), moist, gray, fine to coarse gravel, brick and wire.

SILT WITH SAND (ML), (soft), moist, brown, grassy organic mat. [BURIED TOPSOIL]

LEAN CLAY (CL), trace fine sand, (soft), moist, gray. [OLDER ALLUVIUM]

grades to light gray, higher plasticity

Bottom of Test Pit at 10.0 feet.

General Notes:
1. Refer to Figure A-1 for explanation of descriptions and symbols.
2. Material stratum lines are interpretive and actual changes may be gradual. Solid lines indicate distinct contacts and dashed lines indicate gradual or approximate contacts.
3. USCS designations are based on visual-manual identification (ASTM D 2488), unless otherwise supported by laboratory testing (ASTM D 2487).
4. Groundwater level, if indicated, is at time of drilling/excavation (ATD) or for date specified. Level may vary with time.
5. Location and ground surface elevations are approximate.

HARTCROWSER

Project: Green Hill School Athletic Facility
Location: Chehalis, Washington
Project No.: 19461-00

Test Pit Log
TP-7

Figure **A-11**
Sheet **1 of 1**

Date Started: 5/1/20
Date Completed: 5/1/20
Contractor/Crew: Rivers Edge Environmental Services / Robert McMeyer
Logged by: R. Rosenberg
Checked by: D. Knapp
Rig Model/Type: Volvo 160 / Excavator
Location: Lat: 46.650519 Long: -122.959864 (WGS 84)
Total Depth: 12 feet
Depth to Seepage: 11 feet
Ground Surface Elevation: 188.2 feet (NAVD 88)
Comments:

Sample Data Number / Tests	Material Description	Water Level
	Topsoil (7-inch thick)	
S-1 / WC	POORLY GRADED SAND WITH GRAVEL (SP), (loose), moist, dark gray, fine gravel, frequent charcoal and burnt debris. [FILL]	
S-2	SILTY GRAVEL (GM), (loose to medium dense), moist, gray-brown, scattered charcoal.	
S-3	LEAN CLAY (CL), trace fine sand, (soft to medium stiff), moist, gray.	
	grades to mottled gray-brown to orange	
S-4 / AL, WC		
S-5 / WC		
	Scattered brick debris.	
S-6 / WC	CLAYEY SAND (SC), trace fine gravel, (medium dense), moist to wet, light gray to orange, weak cementation, oxidized. [OLDER ALLUVIUM]	
	minor seepage	5/1/2020
S-7	CLAYEY GRAVEL WITH SAND AND COBBLES (GC), (medium dense), wet, orange-brown, fine to coarse subround to rounded gravel.	
	Bottom of Test Pit at 12.0 feet.	

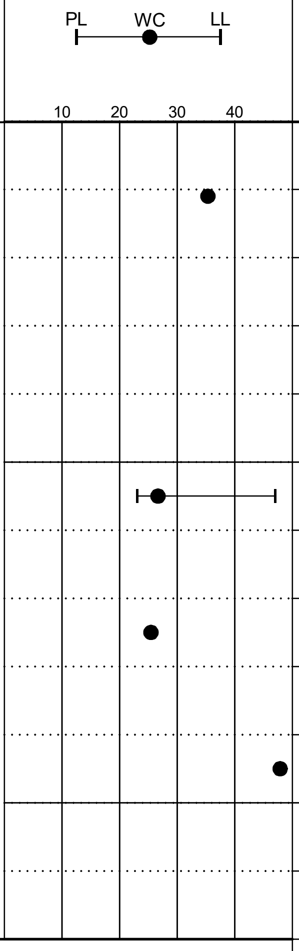

General Notes:
1. Refer to Figure A-1 for explanation of descriptions and symbols.
2. Material stratum lines are interpretive and actual changes may be gradual. Solid lines indicate distinct contacts and dashed lines indicate gradual or approximate contacts.
3. USCS designations are based on visual-manual identification (ASTM D 2488), unless otherwise supported by laboratory testing (ASTM D 2487).
4. Groundwater level, if indicated, is at time of drilling/excavation (ATD) or for date specified. Level may vary with time.
5. Location and ground surface elevations are approximate.

HARTCROWSER

Project: Green Hill School Athletic Facility
Location: Chehalis, Washington
Project No.: 19461-00

Test Pit Log
TP-8

Figure **A-12**
Sheet **1 of 1**

HC TEST PIT - F:\GINT\HC_LIBRARY.GLB - 5/26/20 11:43 - \\SEAFS\PROJECTS\NOTEBOOKS\1946100_GREEN_HILL_SCHOOL_ATHLETIC_FACILITY\FIELD DATA\PERM_GINT FILES\1946100_EXPLORATIONS.GPJ - danielknapp

APPENDIX B
Laboratory Testing

APPENDIX B

Laboratory Testing

General

Soil samples obtained from the explorations were transported to our laboratory in our office in Portland, Oregon and evaluated to confirm or modify field classifications, as well as to assess engineering properties of the soils encountered. Representative samples were selected for laboratory testing. The tests were performed in general accordance with the test methods of the ASTM or other applicable procedures. A summary of the test results is included as Figure B-1.

Visual Classifications

Soil samples obtained from the explorations were visually classified in the field and in our geotechnical laboratory based on the Unified Soil Classification System (USCS) and ASTM classification methods. ASTM Test Method D 2488 was used to classify soils using visual and manual methods. ASTM Test Method D 2487 was used to classify soils based on laboratory test results.

Laboratory Test Results

Moisture Content

Moisture contents of samples were obtained in general accordance with ASTM Test Method D 2216. The results of the moisture content tests completed on samples from the explorations are presented on the exploration logs included in Appendix A and on Figure B-1 in this appendix.

Percent Fines

Fines content analyses were performed to determine the percentage of soils finer than the U.S. No. 200 mesh sieve—the boundary between sand size particles and silt size particles. The tests were performed in general accordance with ASTM Test Method D 1140. The test results are indicated on the exploration logs included in Appendix A and on Figure B-1 in this appendix.

Grain Size Distribution

Sieve analysis tests were performed to determine the quantitative distribution of particle sizes in the sample. The tests were performed in general accordance with ASTM D 6913. The percentages of “fines” sand, and gravel from the test results are indicated on Figure B-1 in this appendix. The full test results are shown on Figure B-3 in this appendix.

Atterberg Limits Testing

Atterberg limits (liquid limit, plastic limit, and plasticity index) were obtained in general accordance with ASTM Test Method D 4318. The results of the Atterberg limits test is presented on the exploration logs included in Appendix A, summarized on Figure B-1 in this appendix, and shown in detail on Figure B-2 in this appendix.

Exploration	Sample ID	Depth	Water Content (%)	Dry Density (pcf)	Fines (%)	Sand (%)	Gravel (%)	Liquid Limit	Plastic Limit	Plasticity Index	Organic Content (%)	Pocket Pen (tsf)	Torvane (tsf)	
B-1/MW-1	S-1	2.5	38.4											
B-1/MW-1	S-3	5.2	23.6		37									
B-1/MW-1	S-4	7.5	24.4		24			50	26	24				
B-1/MW-1	S-6	15.0	11.5											
B-1/MW-1	S-8	25.0	11.4											
B-1/MW-1	S-10	35.0	17.9											
B-2	S-1	2.5	37.8					68	26	42				
B-2	S-3	7.5	27.7		34									
B-2	S-4	10.0	31.6		19									
B-2	S-7	25.0	14.3											
B-2	S-10	40.0	18.0											
B-2	S-12	50.0	37.4											
B-3/MW-2	S-3	7.5	22.5		21									
B-3/MW-2	S-4	10.0	19.0		15									
B-3/MW-2	S-5	15.0	13.1											
TP-1	S-1	0.5	27.5											
TP-1	S-2	1.0	24.4					34	22	12				
TP-1	S-4	6.0	16.4											
TP-1	S-6	11.0	14.8											
TP-2	S-3	5.0	16.3											
TP-2	S-4	7.0	19.0		26	39	35							
TP-2	S-5	10.0	11.6											
TP-2	S-6	13.0	14.6											
TP-3	S-5	7.0	20.1											
TP-3	S-7	11.0	23.7											
TP-3	S-8	13.0	38.9		15									
TP-4	S-4	5.0	23.7											
TP-4	S-5	9.0	57.5											
TP-5	S-2	2.0	28.2											
TP-5	S-5	6.0	16.3											
TP-6	S-3	6.0	24.3											
TP-7	S-3	5.0	34.2											
TP-7	S-4	7.0	33.1											
TP-8	S-1	0.7	35.3											
TP-8	S-4	5.0	26.7					47	23	24				
TP-8	S-5	7.0	25.5											
TP-8	S-6	9.0	47.9											

HARTCROWSER

Project: Green Hill School Athletic Facility
Location: Chehalis, Washington
Project No.: 19461-00

Summary of Laboratory Results

Figure **B-1**
Sheet **1 of 1**

HC LAB SUMMARY (FOR REPORTS) - F:\GINT\HC_LIBRARY.GLB - 5/26/20 12:04 - \\SEAFS\PROJECTS\NOTEBOOKS\1946100_GREEN_HILL_SCHOOL_ATHLETIC_FACILITY\FIELD DATA\PERM_GINT FILES\1946100_EXPLORATIONS.GPJ - danielknapp

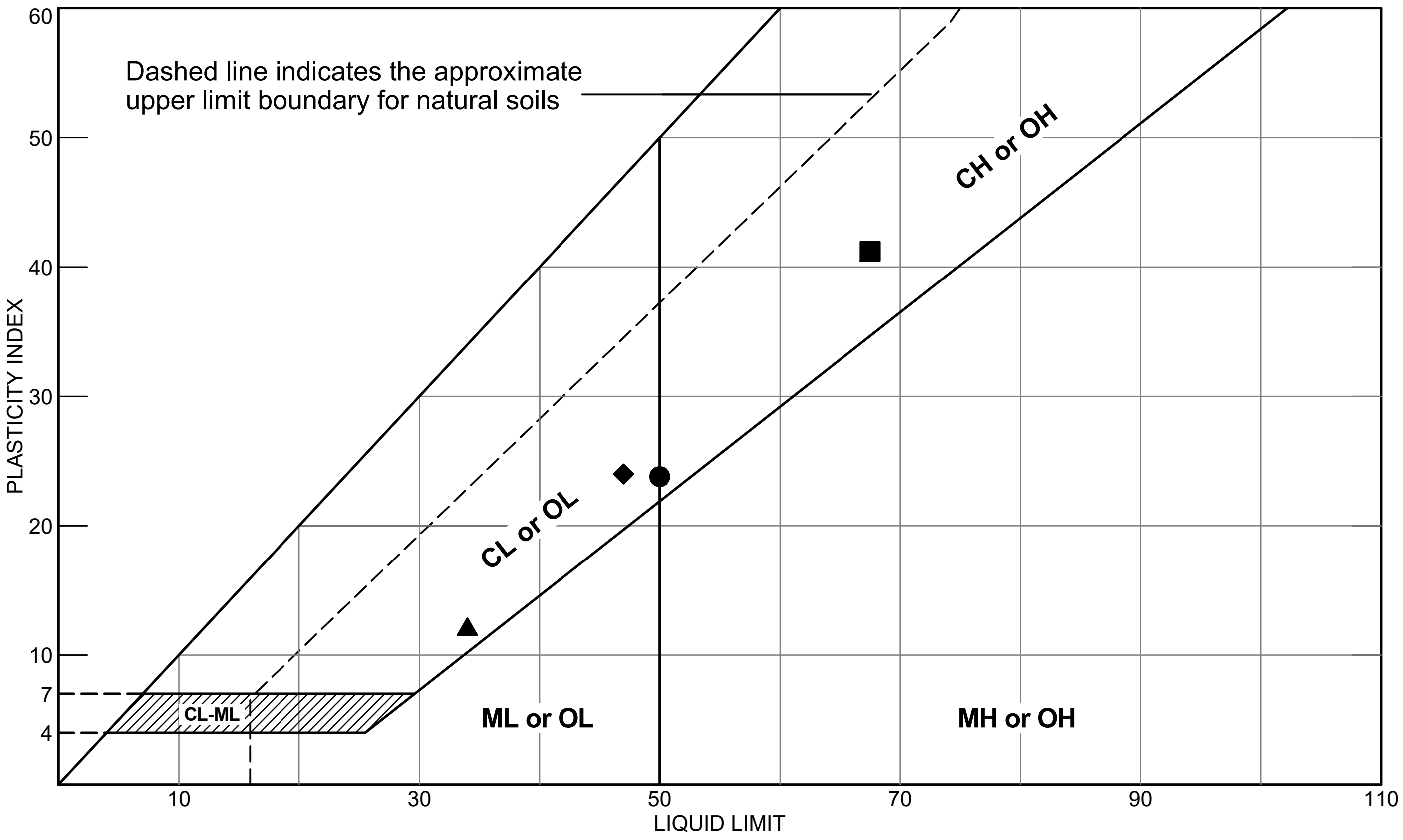

Location and Description	LL	PL	PI	-#200	MC%	USCS
● **Source:** B-1/MW-1 **Sample No.:** S-4 **Depth:** 7.5 to 9.0 CLAYEY GRAVEL WITH SAND	50	26	24	24	24	GC
■ **Source:** B-2 **Sample No.:** S-1 **Depth:** 2.5 to 4.0 FAT CLAY	68	26	42	NT	38	CH
▲ **Source:** TP-1 **Sample No.:** S-2 **Depth:** 1.0 to 2.0 LEAN CLAY	34	22	12	NT	24	CL
◆ **Source:** TP-8 **Sample No.:** S-4 **Depth:** 5.0 to 6.0 LEAN CLAY	47	23	24	NT	27	CL

Remarks:

- ● Test performed only on the material passing the No. 40 sieve; moderate plasticity
- ■ High plasticity
- ▲ Low to moderate plasticity
- ◆ Moderate plasticity

HARTCROWSER

Project: Green Hill School Athletic Facility
Location: Chehalis, Washington
Project No.: 19461-00

Liquid Limit, Plastic Limit, and Plasticity Index

Figure **B-2**
Sheet **1 of 1**

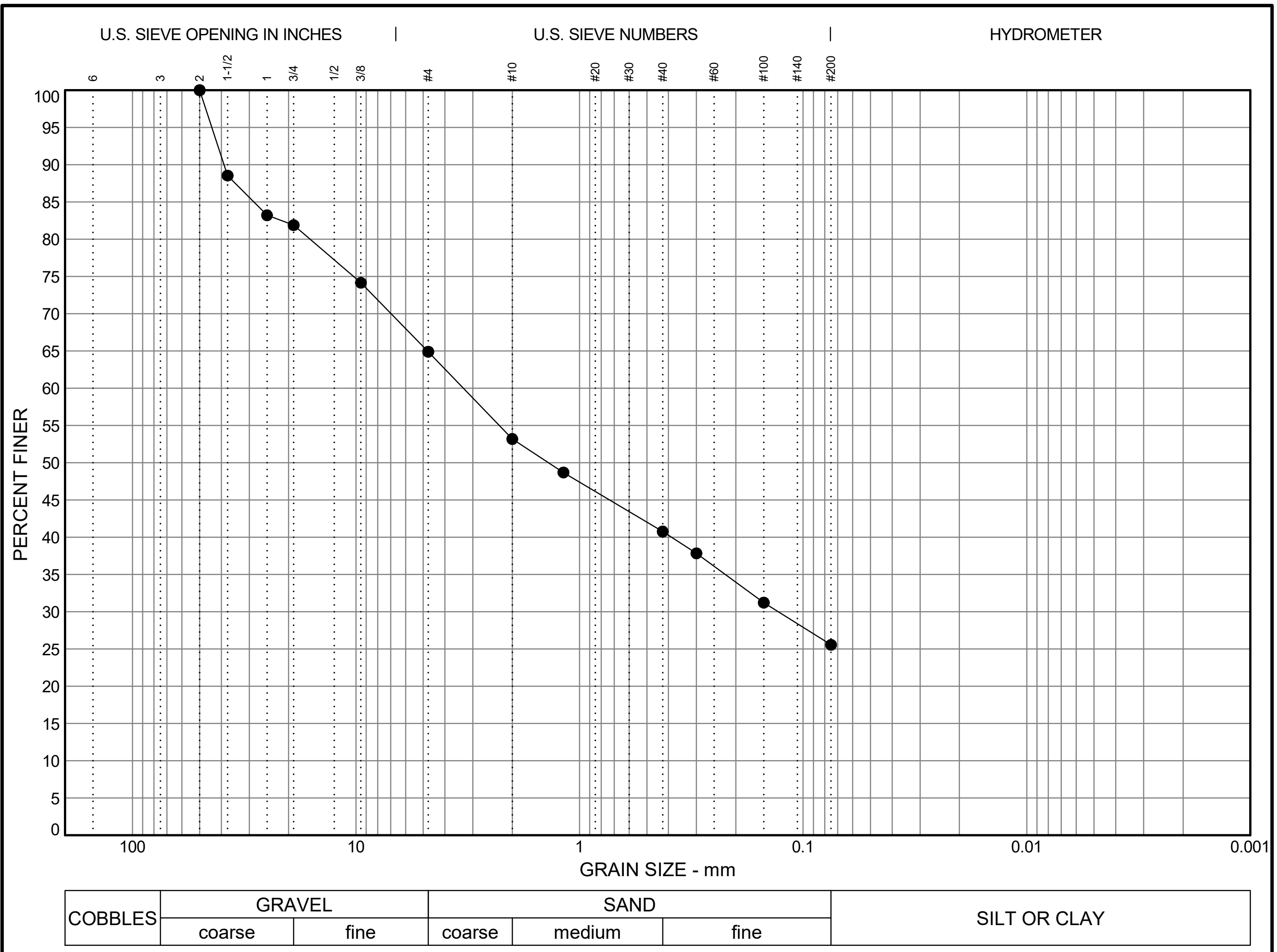

Location and Description	% Cobbles	% Gravel	% Sand	% Silt	% Clay	MC%	USCS
● **Source:** TP-2 **Sample No.:** S-4 **Depth:** 7.0 to 8.0 CLAYEY GRAVEL WITH SAND	0.0	35.1	39.3	25.6		19	GC

☒	LL	PI	D_{85}	D_{60}	D_{50}	D_{30}	D_{15}	D_{10}	C_c	C_u
●			28.647	3.310	1.376	0.129				

Remarks:

● Large highly weathered cobbles slaked during the test, therefore we identify this soil as a gravel not a sand.

HARTCROWSER

Project: Green Hill School Athletic Facility
Location: Chehalis, Washington
Project No.: 19461-00

Particle-Size Analysis

Figure **B-3**
Sheet **1 of 1**

HC GRAIN SIZE - F:\GINT\HC_LIBRARY.GLB - 5/26/20 12:02 - \\SEAFS\PROJECTS\NOTEBOOKS\1946100_GREEN_HILL_SCHOOL_ATHLETIC_FACILITY\FIELD DATA\PERM_GINT FILES\1946100_EXPLORATIONS.GPJ - danielknapp

Appendix C

Project Stormwater Plans

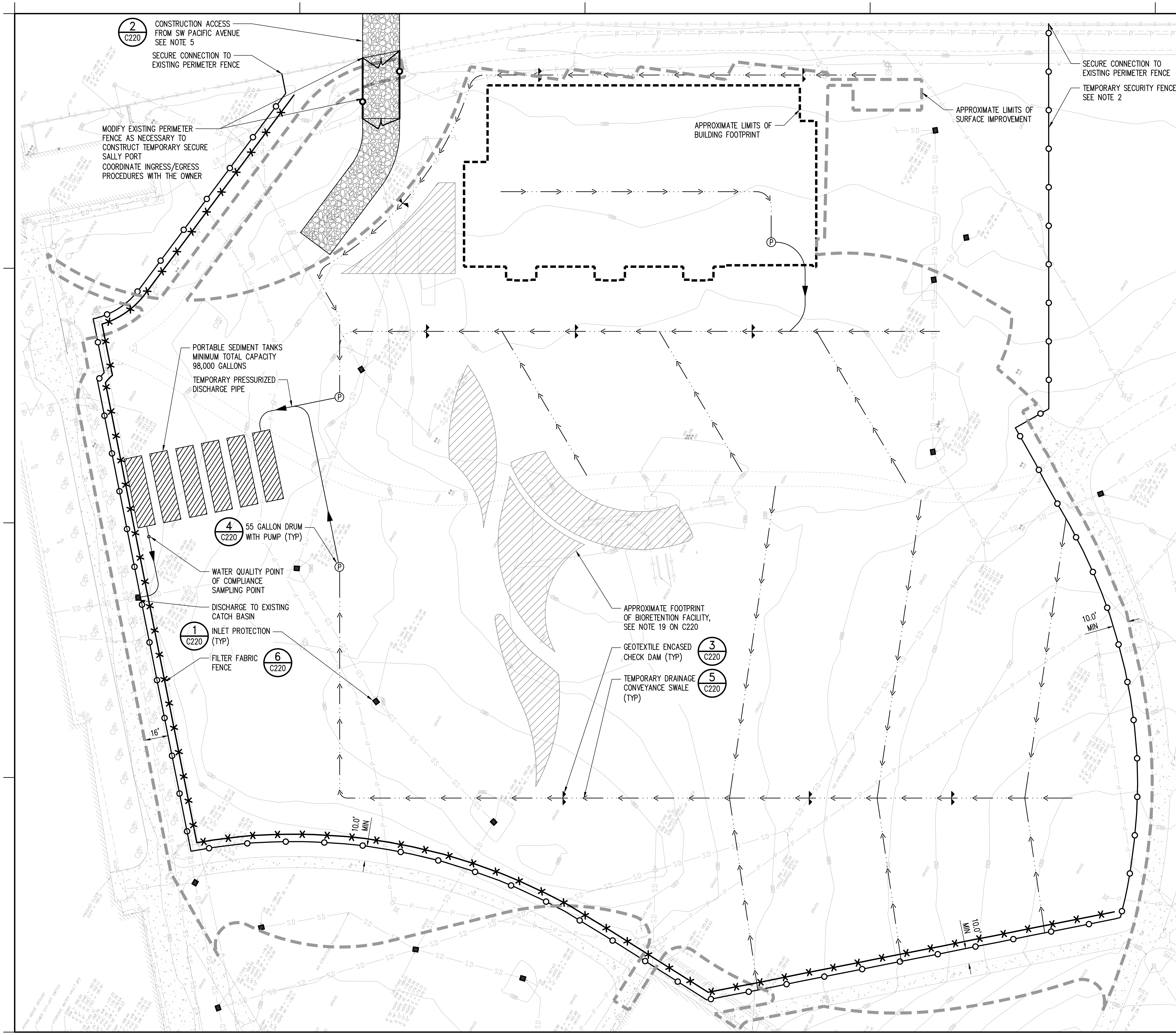

NOTES

1. SEE SHEET C220 FOR ADDITIONAL NOTES RELATED TO TEMPORARY EROSION AND SEDIMENTATION CONTROL.
2. CONTRACTOR SHALL PROVIDE TEMPORARY SECURITY FENCING AS REQUIRED FOR SAFETY, SECURITY, AND AS DIRECTED BY THE OWNER. FENCE SHALL BE MINIMUM 12' HIGH, CLIMB-PROOF, TOPPED WITH RAZOR WIRE, AND VISUALLY SCREENED. FENCING SHALL BE PLACED AS SHOWN IN PLAN AND IN A MANNER THAT ALLOWS FULL USE OF ADJACENT FACILITIES. FENCE SHALL BE SECURELY MOUNTED TO CONCRETE ECOLOGY BLOCKS, CONCRETE JERSEY BARRIER, OR MOUNTED TO CONTINUOUS STRIP FOOTING AS DIRECTED BY THE MANUFACTURER AND APPROVED BY THE OWNER.
3. CONTRACTOR SHALL FULLY DEMOLISH TEMPORARY SECURITY FENCING AND RESTORE EXISTING PERIMETER FENCE TO EXISTING CONDITION FOLLOWING COMPLETION OF CONSTRUCTION.
4. CONSTRUCTION ACCESS AND FENCING FOR WORK FALLING OUTSIDE OF THE TEMPORARY SECURITY FENCING SHOULD BE COORDINATED WITH THE OWNER, AND WHEREVER POSSIBLE SHALL BE SCHEDULED TO MAINTAIN CONTINUED USE OF EXISTING GHS FACILITIES THROUGHOUT CONSTRUCTION.
5. STABILIZED CONSTRUCTION ENTRANCE SHALL EXTEND TO THE EDGE OF PACIFIC AVENUE PAVEMENT. IF REQUIRED TO FACILITATE STORM DRAINAGE CONVEYANCE, A CULVERT SHALL BE PLACED BENEATH THE CONSTRUCTION ENTRANCE BETWEEN THE EXISTING PERIMETER FENCE AND PACIFIC AVENUE.
6. THE ESC FACILITIES SHOWN ON THIS PLAN ARE THE MINIMUM REQUIREMENTS FOR ANTICIPATED SITE CONDITIONS. THE CONTRACTOR SHALL UPGRADE THE ESC FACILITIES TO ACCOUNT FOR ALL STORM EVENTS OR AS DIRECTED BY THE CITY OF CHEHALIS INSPECTOR.
7. TEMPORARY EXCAVATION AND CONSTRUCTION DEWATERING SHALL CONFORM TO THE PROJECT GEOTECHNICAL REPORT PREPARED BY HART CROWSER, INC.
8. THE ESC FACILITIES SHOWN ON THIS PLAN MUST BE CONSTRUCTED IN CONJUNCTION WITH ALL CLEARING AND GRADING ACTIVITIES, AND IN SUCH A MANNER AS TO ENSURE THAT SEDIMENT LADEN WATER DOES NOT LEAVE THE SITE, ENTER THE DRAINAGE SYSTEM, OR VIOLATE APPLICABLE WATER STANDARDS.
9. THE IMPLEMENTATION, MAINTENANCE, AND REPLACEMENT OF ALL ESC FACILITIES IS THE RESPONSIBILITY OF THE CONTRACTOR UNTIL ALL CONSTRUCTION IS APPROVED.
10. THE ESC FACILITIES SHALL BE INSPECTED BY THE CONTRACTOR AND MAINTAINED AS NECESSARY OR AS DIRECTED BY THE OWNER OR CITY OF CHEHALIS INSPECTOR.
11. CATCH BASIN INSERTS SHALL BE PROVIDED FOR ALL STORM DRAIN INLETS AND CATCH BASINS DOWN SLOPE OF DISTURBED AREAS, WITHIN 500 FEET OF THE PROJECT SITE.
12. WATER LEAVING THE SITE DURING CONSTRUCTION, INCLUDING WATER CARRIED BY TRUCK TIRES, SHALL BE CLEAN. THE CONTRACTOR SHALL IMPLEMENT ADDITIONAL SEDIMENTATION CONTROL METHODS AS NEEDED OR AS DIRECTED BY THE CITY OF CHEHALIS INSPECTOR.

SEE C220 FOR CONTINUATION OF NOTES

LEGEND

— — —	LIMIT OF SURFACE IMPROVEMENT
- - - -	APPROXIMATE LIMIT OF BUILDING FOOTPRINT
—○—○—	TEMPORARY SECURITY FENCE (SEE NOTE 2)
—×—×—	FILTER FABRIC FENCE
▨	STABILIZED CONSTRUCTION ENTRANCE
—>—·—·—	TEMPORARY INTERCEPTOR DRAINAGE SWALE
⟿	PRESSURIZED DISCHARGE PIPE
▨	PORTABLE SEDIMENT TANK
▨	APPROXIMATE BIORETENTION FACILITY FOOTPRINT
■	INLET PROTECTION
Ⓟ	55 GALLON DRUM WITH PUMP
▲	GEOTEXTILE ENCASED CHECK DAM
•	WATER QUALITY POINT OF COMPLIANCE SAMPLING JOINT

DLR Group
© DLR Group

MARTIN F. CHASE
STATE OF WASHINGTON
28482
REGISTERED PROFESSIONAL ENGINEER
PRELIMINARY

kpff
1601 5th Avenue, Suite 1600
Seattle, WA 98101
206.622.5822
www.kpff.com

Washington State Department of
CHILDREN, YOUTH & FAMILIES

GREEN HILL SCHOOL RECREATION BUILDING

375 SW 11TH STREET
CHEHALIS, WA 98532

85% CONSTRUCTION DOCUMENTS
February 5, 2021
Revisions

73-18130-00

CSWPP PLAN

C200

\\kpff.com\Civil\1800001-1800999\1800416 GHS Recreation Building Replacement\CADD\Design\03 - CD\C200 TESC.dwg

BradyR

Feb 26, 2021 – 12:28am

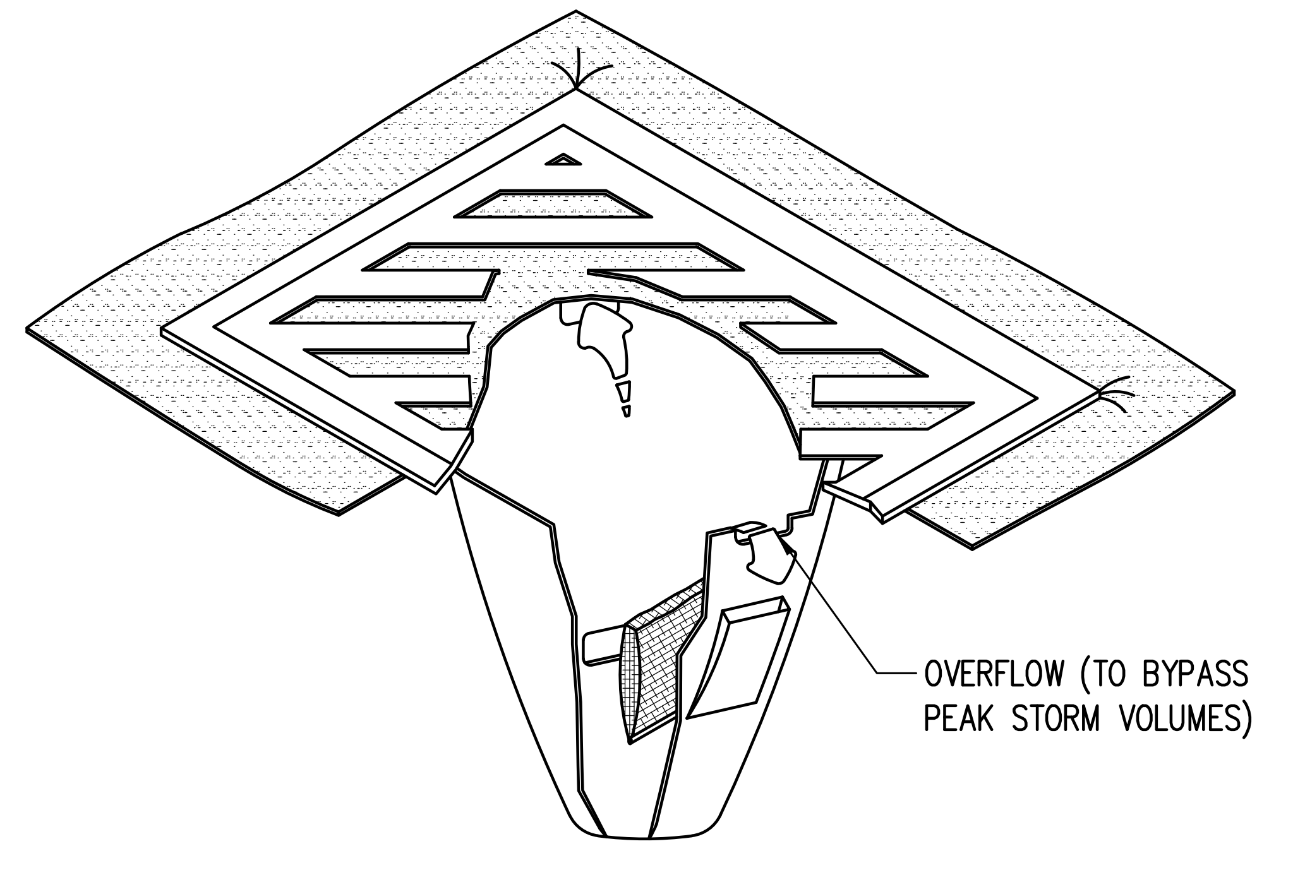

NOTES:

1. CATCH BASIN PROTECTION SHALL COMPLY WITH BMP C220 AS PUBLISHED IN THE 2019 STORMWATER MANAGEMENT MANUAL FOR WESTERN WASHINGTON.
2. CATCH BASIN PROTECTION SHALL BE INSTALLED IN DRAINAGE DEVICES PER THE MANUFACTURER'S RECOMMENDATIONS.

CATCH BASIN/INLET PROTECTION 1

NTS

C200, C800

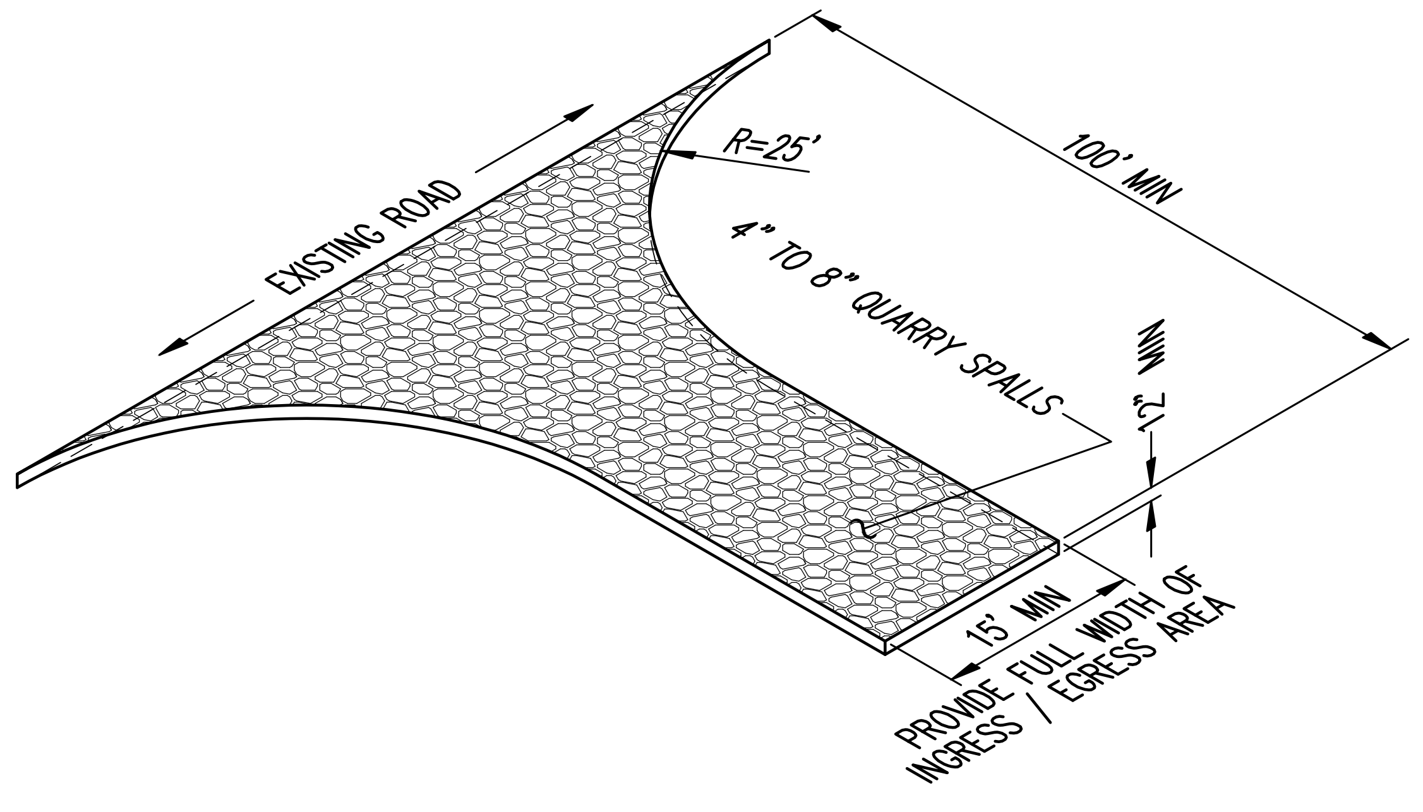

NOTES:

1. INSTALL AND MAINTAIN STABILIZED CONSTRUCTION ENTRANCE PER BMP C105 AS PUBLISHED IN THE 2019 STORMWATER MANAGEMENT MANUAL FOR WESTERN WASHINGTON.

STABILIZED CONSTRUCTION ENTRANCE 2

NTS

C200

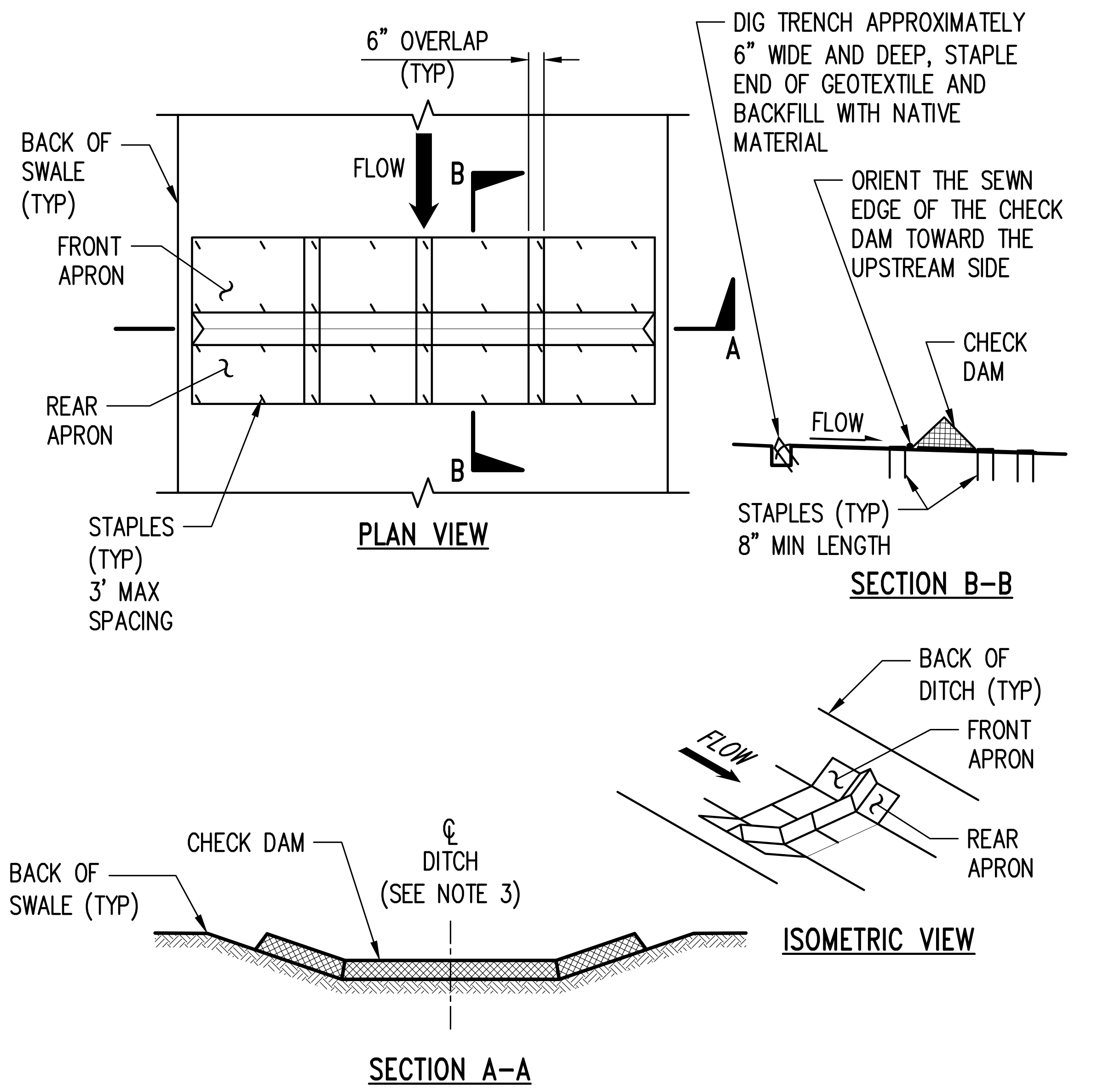

NOTES:

1. INSTALL AND MAINTAIN GEOTEXTILE ENCASED CHECK DAM PER BMP C207 AS PUBLISHED IN THE 2019 STORMWATER MANAGEMENT MANUAL FOR WESTERN WASHINGTON.

GEOTEXTILE ENCASED CHECK DAM 3

NTS

C200

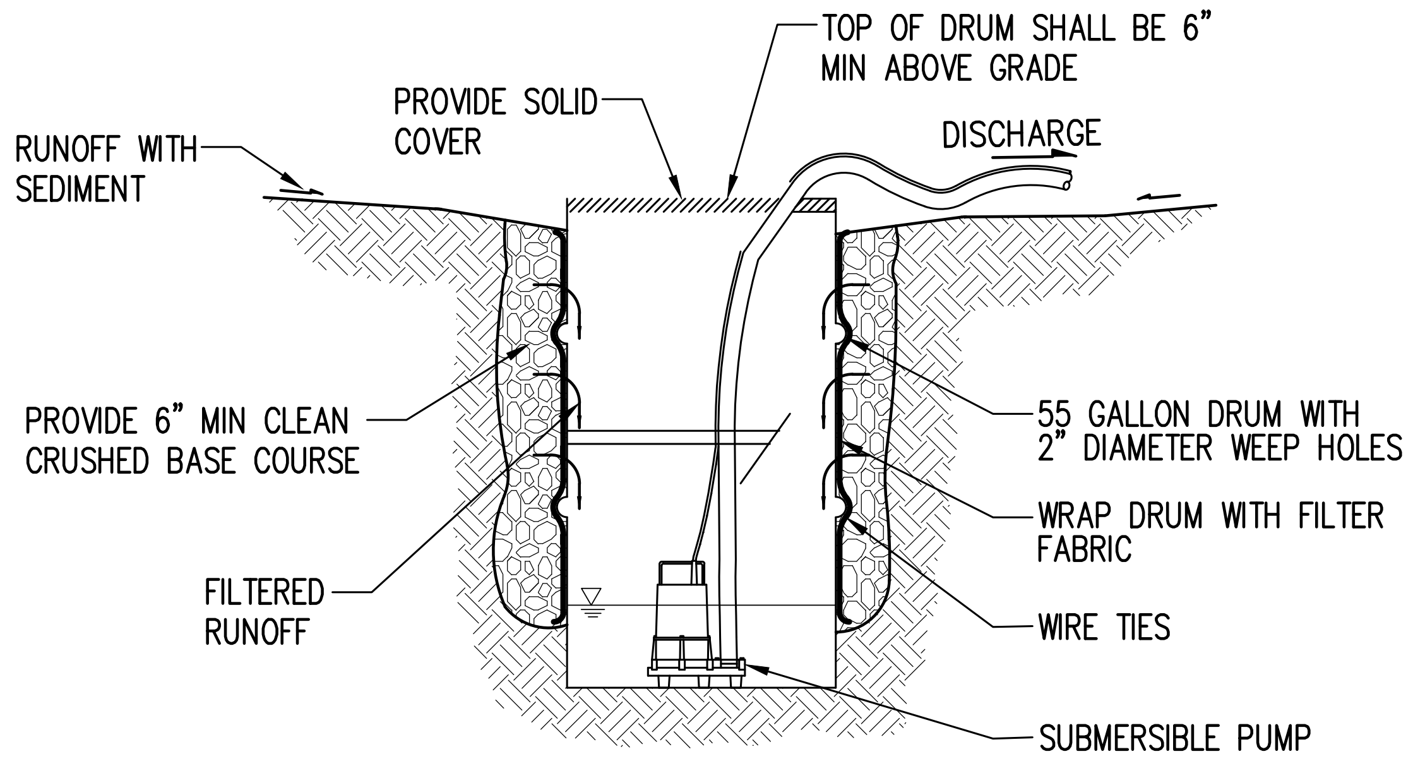

NOTES:

SIZE PUMP AS REQUIRED TO ACCOMMODATE SITE CONDITIONS.

55 GALLON DRUM WITH PUMP 4

NTS

C200

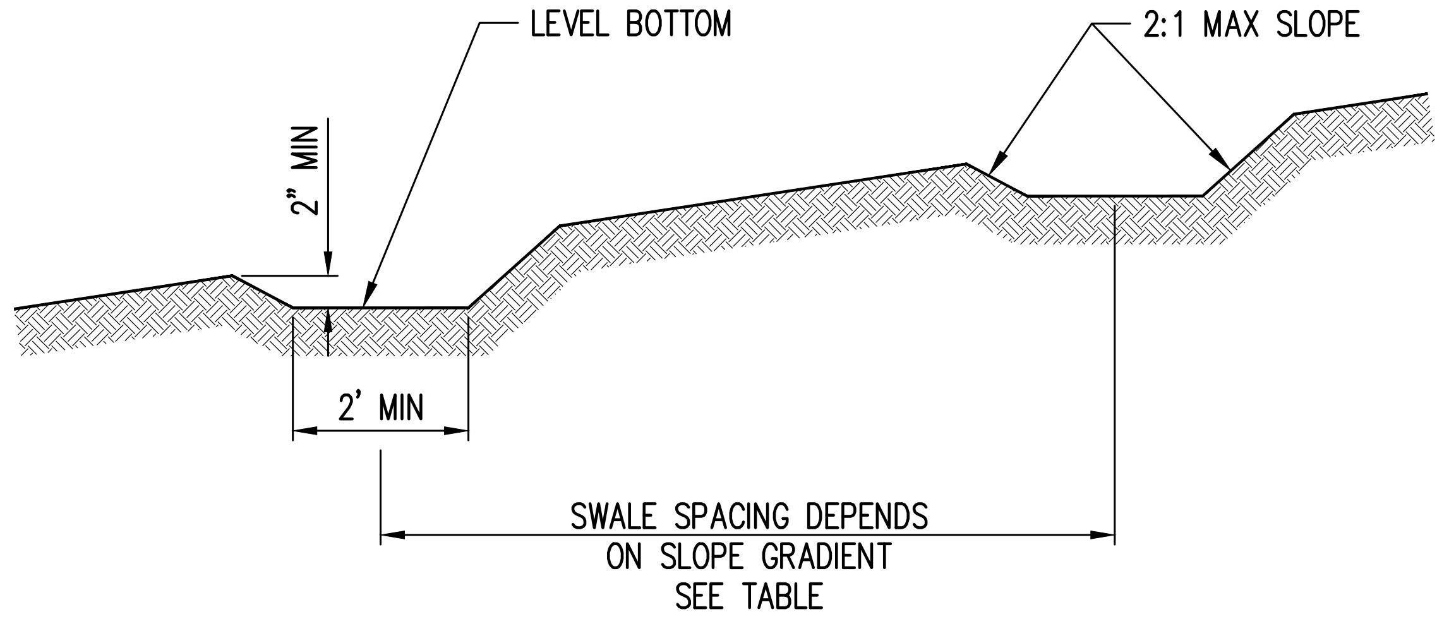

SWALE SPACING		
AVERAGE SLOPE	SLOPE PERCENT	FLOWPATH LENGTH
20(H) : 1(V)	3-5%	300 FEET
10-20(H) : 1(V)	5-10%	200 FEET
4-10(H) : 1(V)	10-25%	100 FEET
2-4(H) : 1(V)	25-50%	50 FEET

NOTES:

1. INSTALL AND MAINTAIN TEMPORARY INTERCEPTOR SWALE PER BMP C200 AS PUBLISHED IN THE 2019 STORMWATER MANAGEMENT MANUAL FOR WESTERN WASHINGTON.

TEMPORARY INTERCEPTOR DRAINAGE SWALE 5

NTS

C200

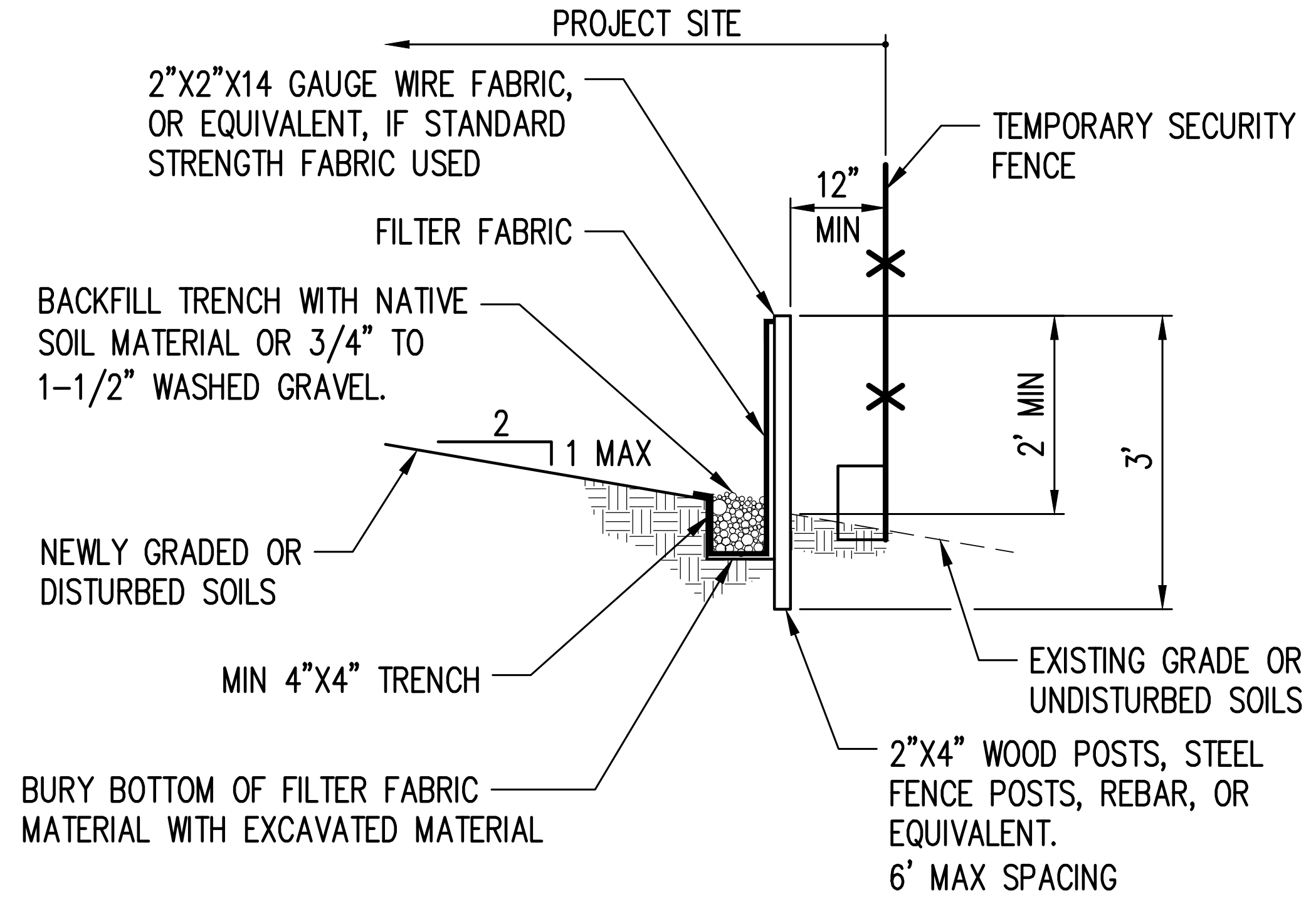

TYPICAL CROSS SECTION

NOTES:

1. FILTER FABRIC FENCES SHALL BE INSTALLED ALONG CONTOUR WHENEVER POSSIBLE.
2. ANGLE FILTER FABRIC FENCE BACK UP THE SLOPE AT THE END OF THE RUN.
3. SILT FENCE SHALL BE REMOVED AT THE END OF THE JOB.
4. WHERE THE FENCE IS INSTALLED, THE SLOPE SHALL BE NO STEEPER THAN 2H:1V.
5. JOINTS IN FILTER FABRIC SHALL BE SPLICED AT POSTS. USE STAPLES, WIRE RINGS, OR EQUIVALENT TO ATTACH FABRIC TO POSTS.

MAINTENANCE STANDARDS

1. ANY DAMAGE SHALL BE REPAIRED IMMEDIATELY.
2. IF CONCENTRATED FLOWS ARE EVIDENT UPHILL OF THE FENCE, THEY SHALL BE INTERCEPTED AND CONVEYED TO A PORTABLE SEDIMENT TANK.
3. CHECK THE UPHILL SIDE OF THE FENCE FOR SIGNS OF THE FENCE CLOGGING AND ACTING AS A BARRIER TO FLOW AND THEN CAUSING CHANNELIZATION OF FLOWS PARALLEL TO THE FENCE. IF THIS OCCURS, REPLACE THE FENCE OR REMOVE THE TRAPPED SEDIMENT.
4. REMOVE SEDIMENT WHEN IT REACHES 6" IN HEIGHT.
5. DETERIORATED FILTER FABRIC SHALL BE REPLACED.

FILTER FABRIC FENCE 6

NTS

C200, C800

NOTES CONTINUED

13. NO SEDIMENT SHALL BE TRACKED INTO THE STREET OR ONTO PAVED SURFACES. SEDIMENT SHALL BE REMOVED FROM ALL TRUCKS AND EQUIPMENT PRIOR TO LEAVING THE SITE.
14. WATER FROM DISTURBED AREAS SHALL BE DIRECTED TO A SUMP PUMP VIA SHEET FLOW OR TEMPORARY INTERCEPTOR SWALES, CONSTRUCTED AS NEEDED, OR AS DIRECTED BY THE CITY OF CHEHALIS INSPECTOR. WATER COLLECTED IN THE SUMP SHALL BE PUMPED TO SETTLING TANKS. SWALE AND PUMP LAYOUT SHOWN IS SCHEMATIC IN NATURE, AND SHOULD BE ADJUSTED AS NECESSARY TO FACILITATE PROPER SITE DRAINAGE. ADDITIONAL PUMPS MAY BE REQUIRED.
15. CONTRACTOR SHALL PROVIDE BACK-UP PUMPS WITH SUFFICIENT HORSEPOWER TO DELIVER WATER INTO THE SETTLING TANKS AS SHOWN ON THE PLAN.
16. SETTLING TANK SHALL HAVE A MINIMUM CAPACITY AS NOTED ON THE PLAN. SETTLING TANK SHALL BE "BAKER TANK," "RAIN FOR RENT," OR AN APPROVED EQUAL. CONTRACTOR TO FIELD LOCATE PER CONSTRUCTION MEANS AND METHODS. IF REQUIRED, CONTRACTOR SHALL OBTAIN TEMPORARY RIGHT OF WAY USE PERMIT. CONTRACTOR SHALL PROVIDE SAFE PEDESTRIAN PASSAGE AROUND THE TANK AT ALL TIMES.
17. CONTRACTOR SHALL PREVENT ON-SITE EROSION BY STABILIZING ALL DISTURBED SOILS INCLUDING BUT NOT LIMITED TO ROUGH GRADING AREAS RESULTING FROM TEMPORARY CUTS, BACKFILL OF TEMPORARY CUTS TO ROUGH FINAL GRADE, AND STOCK PILES THAT ARE TEMPORARILY EXPOSED.
18. EXPOSED SOILS SHALL NOT BE LEFT EXPOSED AND UNWORKED FOR MORE THAN 2 DAYS BETWEEN (OCTOBER 1 – APRIL 30) OR 7 DAYS BETWEEN (MAY 1 – SEPTEMBER 30).
19. CONTRACTOR SHALL BE SOLELY RESPONSIBLE FOR PROTECTING ALL PERMANENT STORMWATER FACILITIES AND THE SUBGRADE BELOW THOSE FACILTIES FROM CONSTRUCTION STORMWATER. NO STORMWATER SHALL BE DIRECTED TO PERMANENT DETENTION/WATER QUALITY FACILITIES UNTIL THE SITE IS PERMANENTLY STABILIZED AS DETERMINED BY THE ENGINEER.
20. WHERE SITE DISTURBANCE OCCURS OUTSIDE OF THE LIMITS OF PROPOSED SURFACE IMPROVEMENTS, THE DISTURBED LAWN AREA SHALL BE RESTORED PER THE APPROPRIATE LANDSCAPE PLANTING DETAILS.

DLR Group

MARTIN F. CHASE
STATE OF WASHINGTON
28482
REGISTERED PROFESSIONAL ENGINEER
PRELIMINARY

kpff
1601 5th Avenue, Suite 1600
Seattle, WA 98101
206.622.5822
www.kpff.com

Washington State Department of
CHILDREN, YOUTH & FAMILIES

GREEN HILL SCHOOL RECREATION
BUILDING

375 SW 11TH STREET
CHEHALIS, WA 98532

85% CONSTRUCTION
DOCUMENTS
February 5, 2021
Revisions

73-18130-00

CSWPP DETAILS

C220

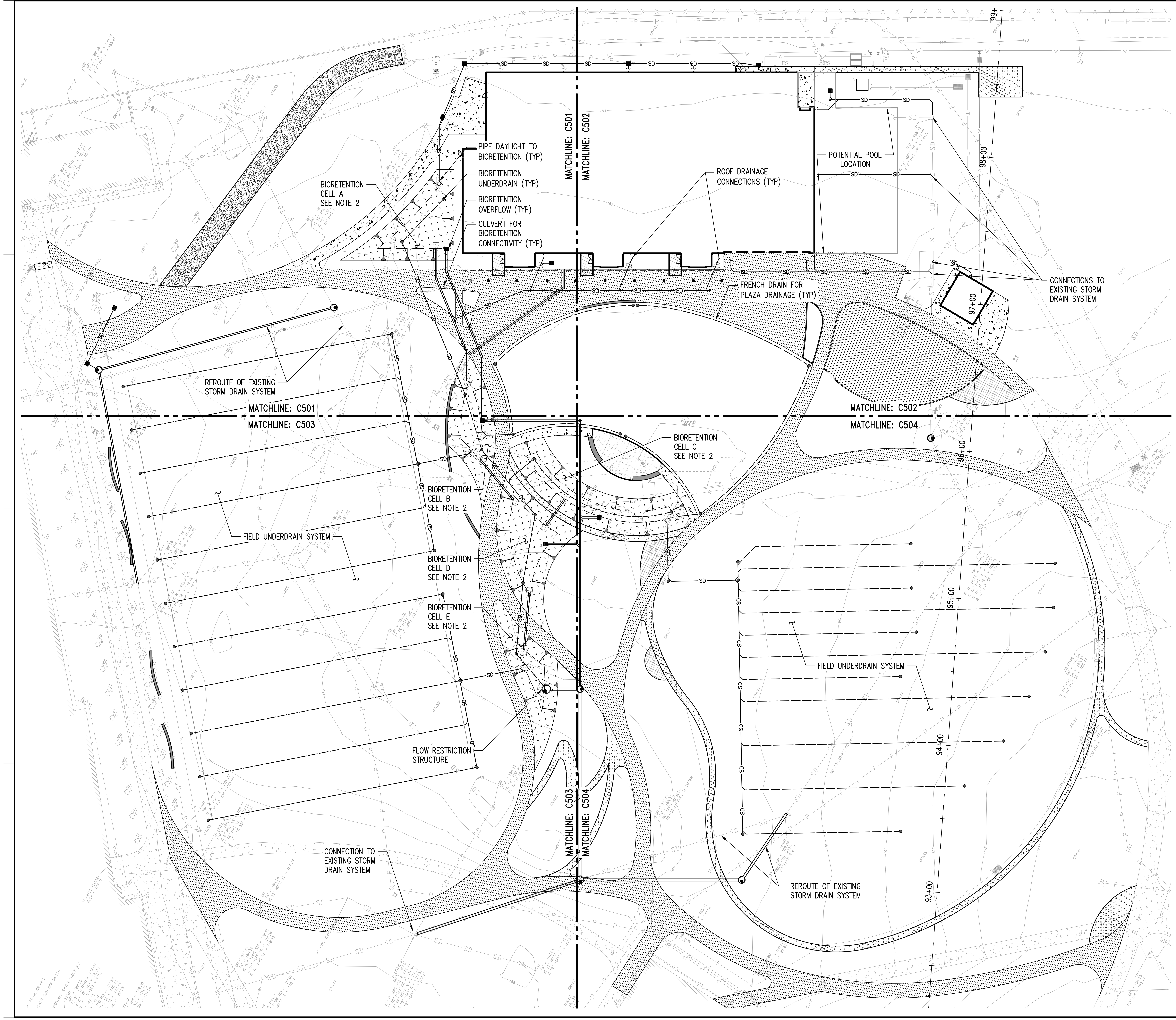

NOTES

1. SEE C501–504 FOR STORM DRAINAGE DESIGN
2. REFER TO BIORETENTION CELL SUMMARY TABLE ON C520 FOR PONDING DEPTH, SIDE SLOPES, MINIMUM BOTTOM AREA AND PONDING AREA.

LEGEND

—SD—	STORM DRAIN LESS THAN 12"
═══	STORM DRAIN 12" AND LARGER
– – – –	PERFORATED STORM DRAIN
■	STORM DRAIN CATCH BASIN
•	STORM DRAIN CLEANOUT
⊙	STORM DRAIN MANHOLE
⊞	BIORETENTION PLANTER
░	VEHICULAR CONCRETE PAVEMENT
▨	PEDESTRIAN CONCRETE PAVEMENT
░	GRAVEL PAVEMENT
▓	ASPHALT PAVEMENT

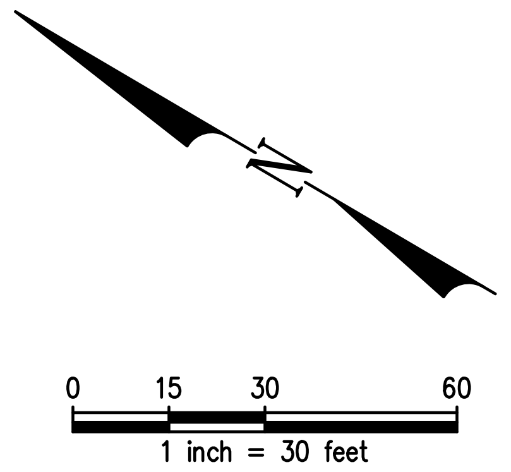

DLR Group
© DLR Group

PRELIMINARY
MARTIN F. CHASE
28482

kpff
1601 5th Avenue, Suite 1600
Seattle, WA 98101
206.622.5822
www.kpff.com

Washington State Department of
CHILDREN, YOUTH & FAMILIES

GREEN HILL SCHOOL RECREATION BUILDING

375 SW 11TH STREET
CHEHALIS, WA 98532

85% CONSTRUCTION DOCUMENTS
February 5, 2021
Revisions

73-18130-00

STORM DRAIN PLAN - OVERALL

C500

Feb 26, 2021 – 12:29am BradyR \\kpff.com\Civil\1800001-1800999\1800416 GHS Recreation Building Replacement\CADD\Design\03 – CD\C500 STRM.dwg

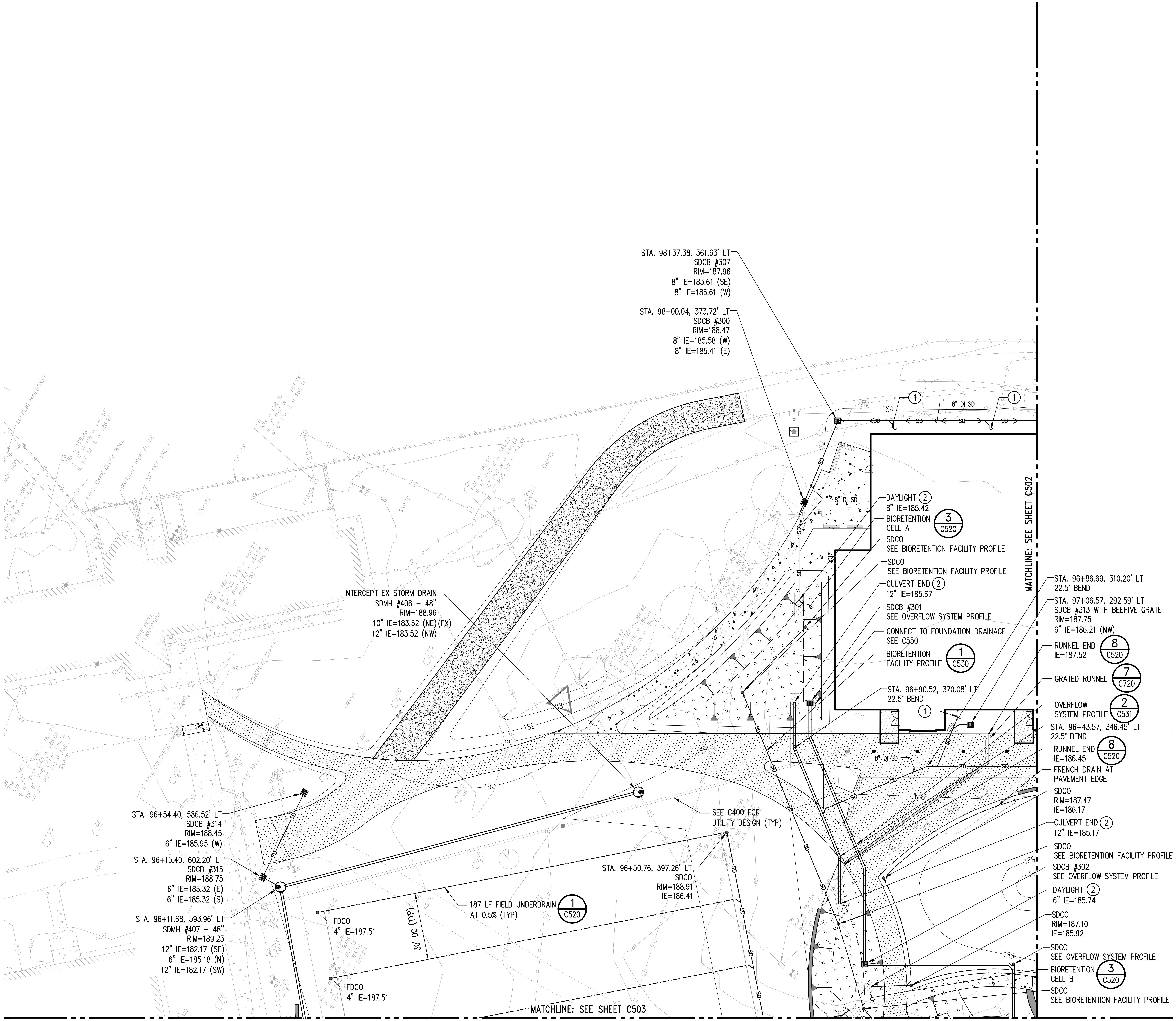

NOTES

1. STORM DRAIN PIPE SHALL BE 8" DIAMETER UNLESS NOTED OTHERWISE.
2. STORM DRAIN CATCH BASINS SHALL BE PER COC STD DWG 3-1 WITH LOCKING LIDS.
3. STORM DRAIN MANHOLES SHALL BE PER COC STD DWG 5-2 WITH LOCKING LIDS.
4. STORM DRAIN CLEANOUTS SHALL BE PER COC STD DWG 5-5 WITH LOCKING LIDS.
5. DUCTILE IRON PIPE SHALL BE USED FOR SOLID-WALL STORM DRAINS WHERE PIPE HAS LESS THAN 2 FEET OF COVER.
6. ALL FIELD DRAIN CLEANOUTS (FDCO) SHALL BE PER DETAIL 7 ON SHEET C520.

FLAG NOTES

① 6" SD POC TO BUILDING DOWNSPOUT: IE = 186.67
SEE ARCHITECTURAL FOR CONTINUATION

② STORM DRAIN PIPE DAYLIGHT 5/C520

③ EXISTING STORM STRUCTURE TO REMAIN
RAISE RIM TO FINISHED GRADE

LEGEND

—SD—	STORM DRAIN LESS THAN 12"
═	STORM DRAIN 12" AND LARGER
– – –	PERFORATED STORM DRAIN
■	STORM DRAIN CATCH BASIN
•	STORM DRAIN CLEANOUT
◉	STORM DRAIN MANHOLE
▨	BIORETENTION PLANTER
▨	VEHICULAR CONCRETE PAVEMENT
▨	PEDESTRIAN CONCRETE PAVEMENT
▨	GRAVEL PAVEMENT

0 10 20 40
1 inch = 20 feet

Call 811
two business days before you dig

DLR Group
© DLR Group

PRELIMINARY

kpff
1601 5th Avenue, Suite 1600
Seattle, WA 98101
206.622.5822
www.kpff.com

Washington State Department of
CHILDREN, YOUTH & FAMILIES

GREEN HILL SCHOOL RECREATION BUILDING
375 SW 11TH STREET
CHEHALIS, WA 98532

85% CONSTRUCTION DOCUMENTS
February 5, 2021
Revisions

73-18130-00

STORM DRAIN PLAN - NORTH

C501

\\kpff.com\Civil\1800001-1800999\1800416 GHS Recreation Building Replacement\CADD\Design\03 - CD\C500 STRM.dwg

BrodyR

Feb 26, 2021 – 12:29pm

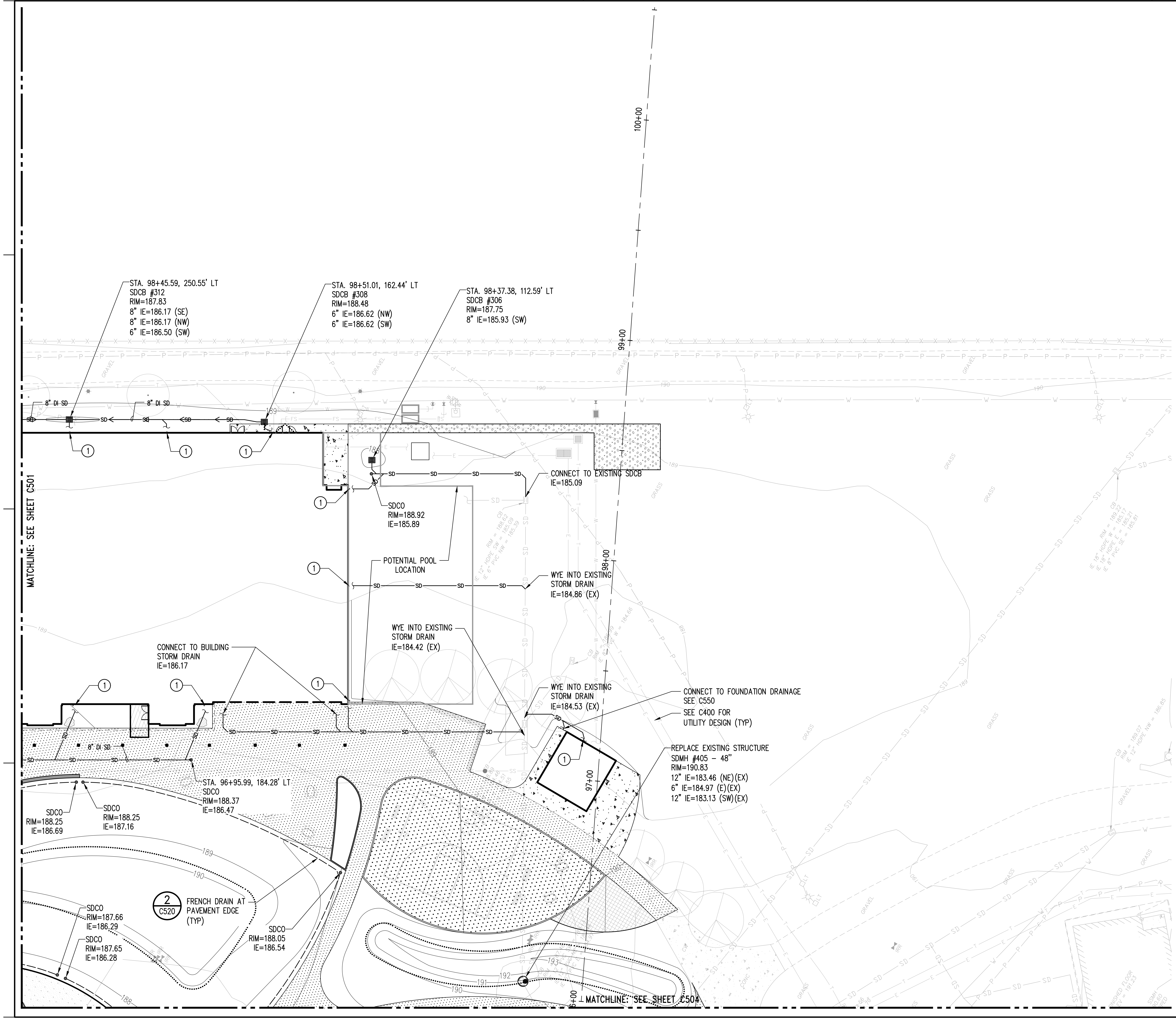

NOTES

1. STORM DRAIN PIPE SHALL BE 8" DIAMETER UNLESS NOTED OTHERWISE.
2. STORM DRAIN CATCH BASINS SHALL BE PER COC STD DWG 3-1 WITH LOCKING LIDS.
3. STORM DRAIN MANHOLES SHALL BE PER COC STD DWG 5-2 WITH LOCKING LIDS.
4. STORM DRAIN CLEANOUTS SHALL BE PER COC STD DWG 5-5 WITH LOCKING LIDS.
5. DUCTILE IRON PIPE SHALL BE USED FOR SOLID-WALL STORM DRAINS WHERE PIPE HAS LESS THAN 2 FEET OF COVER.
6. ALL FIELD DRAIN CLEANOUTS (FDCO) SHALL BE PER DETAIL 7 ON SHEET C520.

FLAG NOTES

① 6" SD POC TO BUILDING DOWNSPOUT: IE = 186.67
SEE ARCHITECTURAL FOR CONTINUATION

② STORM DRAIN PIPE DAYLIGHT 5/C520

③ EXISTING STORM STRUCTURE TO REMAIN
RAISE RIM TO FINISHED GRADE

LEGEND

—SD—	STORM DRAIN LESS THAN 12"
═	STORM DRAIN 12" AND LARGER
– – –	PERFORATED STORM DRAIN
······	GRADE BREAK
■	STORM DRAIN CATCH BASIN
•	STORM DRAIN CLEANOUT
◉	STORM DRAIN MANHOLE
▭	BIORETENTION PLANTER
▨	VEHICULAR CONCRETE PAVEMENT
▨	PEDESTRIAN CONCRETE PAVEMENT
▨	GRAVEL PAVEMENT
▨	ASPHALT PAVEMENT

Call 811
two business days
before you dig

DLR Group
© DLR Group

MARTIN F. CHASE
STATE OF WASHINGTON
28482
PRELIMINARY

kpff
1601 5th Avenue, Suite 1600
Seattle, WA 98101
206.622.5822
www.kpff.com

Washington State Department of
CHILDREN, YOUTH & FAMILIES

GREEN HILL SCHOOL RECREATION
BUILDING

375 SW 11TH STREET
CHEHALIS, WA 98532

85% CONSTRUCTION
DOCUMENTS
February 5, 2021
Revisions

73-18130-00

STORM DRAIN
PLAN - EAST

C502

\\kpff.com\Civil\1800001-1800999\1800416 GHS Recreation Building Replacement\CAD\Design\03 - CD\C500 STRM.dwg
BradyR
Feb 26, 2021 - 12:29am

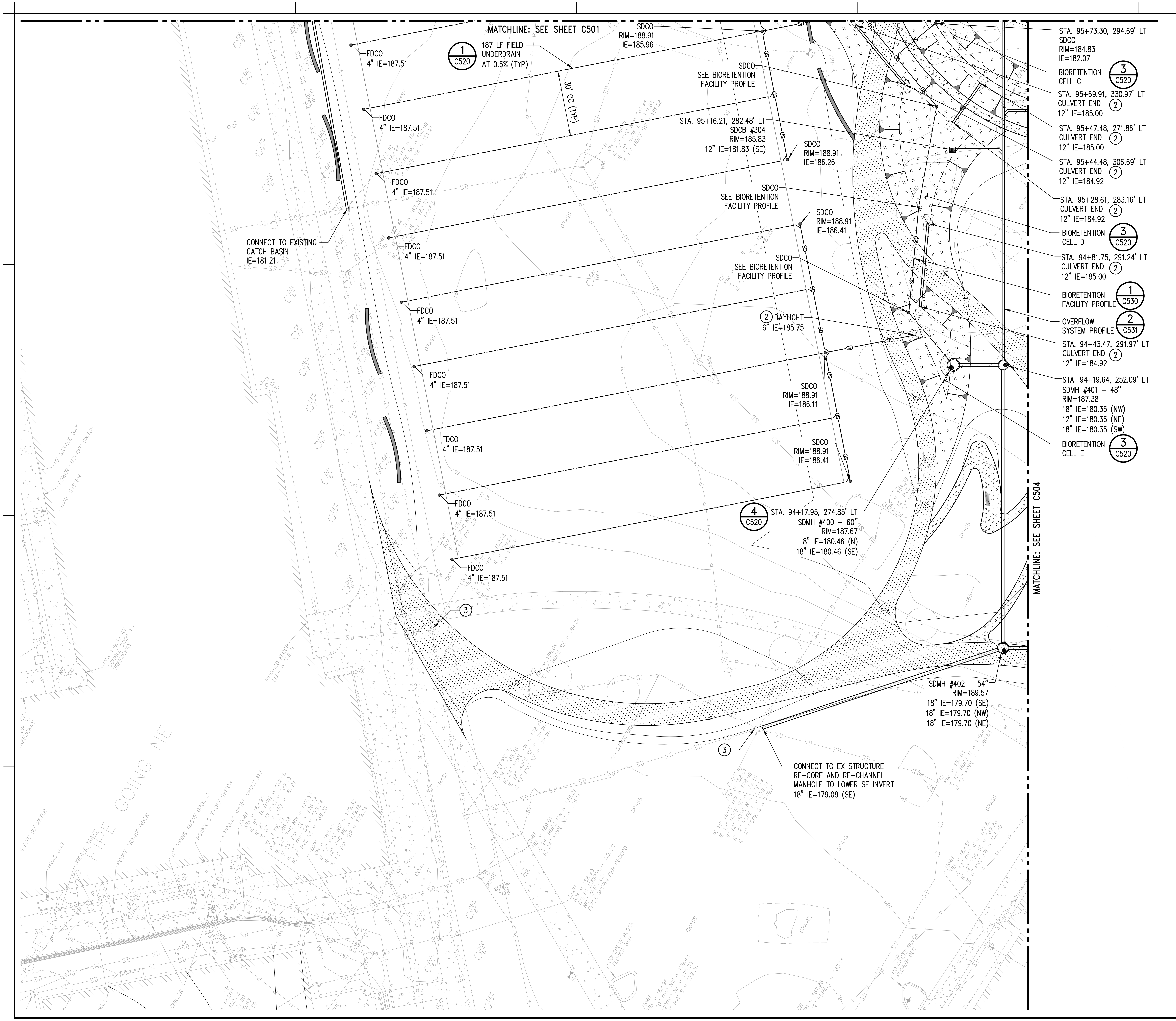

NOTES

1. STORM DRAIN PIPE SHALL BE 8" DIAMETER UNLESS NOTED OTHERWISE.
2. STORM DRAIN CATCH BASINS SHALL BE PER COC STD DWG 3–1 WITH LOCKING LIDS.
3. STORM DRAIN MANHOLES SHALL BE PER COC STD DWG 5–2 WITH LOCKING LIDS.
4. STORM DRAIN CLEANOUTS SHALL BE PER COC STD DWG 5–5 WITH LOCKING LIDS.
5. DUCTILE IRON PIPE SHALL BE USED FOR SOLID–WALL STORM DRAINS WHERE PIPE HAS LESS THAN 2 FEET OF COVER.
6. ALL FIELD DRAIN CLEANOUTS (FDCO) SHALL BE PER DETAIL 7 ON SHEET C520.

FLAG NOTES

① 6" SD POC TO BUILDING DOWNSPOUT: IE = 186.67
SEE ARCHITECTURAL FOR CONTINUATION

② STORM DRAIN PIPE DAYLIGHT 5/C520

③ EXISTING STORM STRUCTURE TO REMAIN
RAISE RIM TO FINISHED GRADE

LEGEND

—SD—	STORM DRAIN LESS THAN 12"
═══	STORM DRAIN 12" AND LARGER
– – – –	PERFORATED STORM DRAIN
■	STORM DRAIN CATCH BASIN
•	STORM DRAIN CLEANOUT
◉	STORM DRAIN MANHOLE
▭	BIORETENTION PLANTER
▨	VEHICULAR CONCRETE PAVEMENT
▨	GRAVEL PAVEMENT

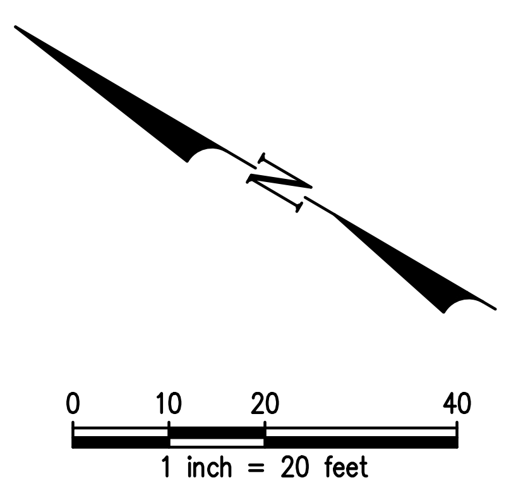

Call 811 two business days before you dig

DLR Group
© DLR Group

PRELIMINARY

kpff
1601 5th Avenue, Suite 1600
Seattle, WA 98101
206.622.5822
www.kpff.com

Washington State Department of
CHILDREN, YOUTH & FAMILIES

GREEN HILL SCHOOL RECREATION BUILDING

375 SW 11TH STREET
CHEHALIS, WA 98532

85% CONSTRUCTION DOCUMENTS
February 5, 2021
Revisions

73-18130-00

STORM DRAIN PLAN - WEST

C503

\\kpff.com\Civil\1800001-1800999\1800416 GHS Recreation Building Replacement\CADD\Design\03 - CD\C500 STRM.dwg
BrodyR
Feb 26, 2021 – 12:29pm

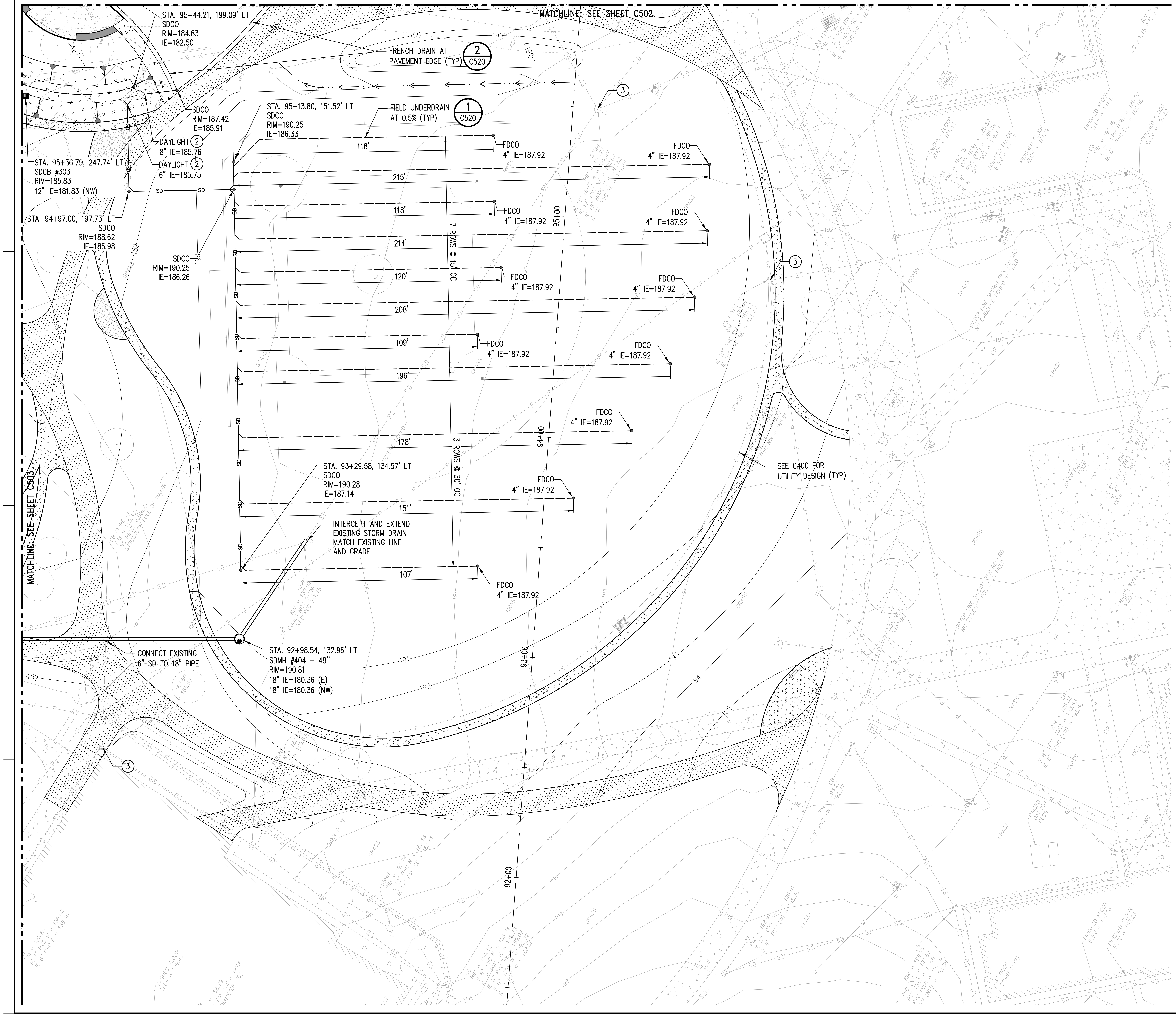

NOTES

1. STORM DRAIN PIPE SHALL BE 8" DIAMETER UNLESS NOTED OTHERWISE.
2. STORM DRAIN CATCH BASINS SHALL BE PER COC STD DWG 3–1 WITH LOCKING LIDS.
3. STORM DRAIN MANHOLES SHALL BE PER COC STD DWG 5–2 WITH LOCKING LIDS.
4. STORM DRAIN CLEANOUTS SHALL BE PER COC STD DWG 5–5 WITH LOCKING LIDS.
5. DUCTILE IRON PIPE SHALL BE USED FOR SOLID–WALL STORM DRAINS WHERE PIPE HAS LESS THAN 2 FEET OF COVER.
6. ALL FIELD DRAIN CLEANOUTS (FDCO) SHALL BE PER DETAIL 7 ON SHEET C520.

FLAG NOTES

① 6" SD POC TO BUILDING DOWNSPOUT: IE = 186.67
SEE ARCHITECTURAL FOR CONTINUATION

② STORM DRAIN PIPE DAYLIGHT 5/C520

③ EXISTING STORM STRUCTURE TO REMAIN
RAISE RIM TO FINISHED GRADE

LEGEND

—SD—	STORM DRAIN LESS THAN 12"
═	STORM DRAIN 12" AND LARGER
– – –	PERFORATED STORM DRAIN
■	STORM DRAIN CATCH BASIN
•	STORM DRAIN CLEANOUT
◉	STORM DRAIN MANHOLE
▭	BIORETENTION PLANTER
▨	VEHICULAR CONCRETE PAVEMENT
▨	GRAVEL PAVEMENT

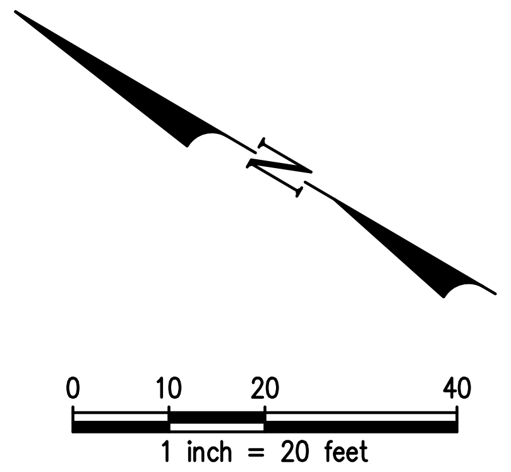

Call 811 two business days before you dig

DLR Group
© DLR Group

MARTIN F. CHASE
STATE OF WASHINGTON
28482
REGISTERED PROFESSIONAL ENGINEER
PRELIMINARY

kpff
1601 5th Avenue, Suite 1600
Seattle, WA 98101
206.622.5822
www.kpff.com

Washington State Department of CHILDREN, YOUTH & FAMILIES

GREEN HILL SCHOOL RECREATION BUILDING
375 SW 11TH STREET
CHEHALIS, WA 98532

85% CONSTRUCTION DOCUMENTS
February 5, 2021
Revisions

73-18130-00

STORM DRAIN PLAN - SOUTH

C504

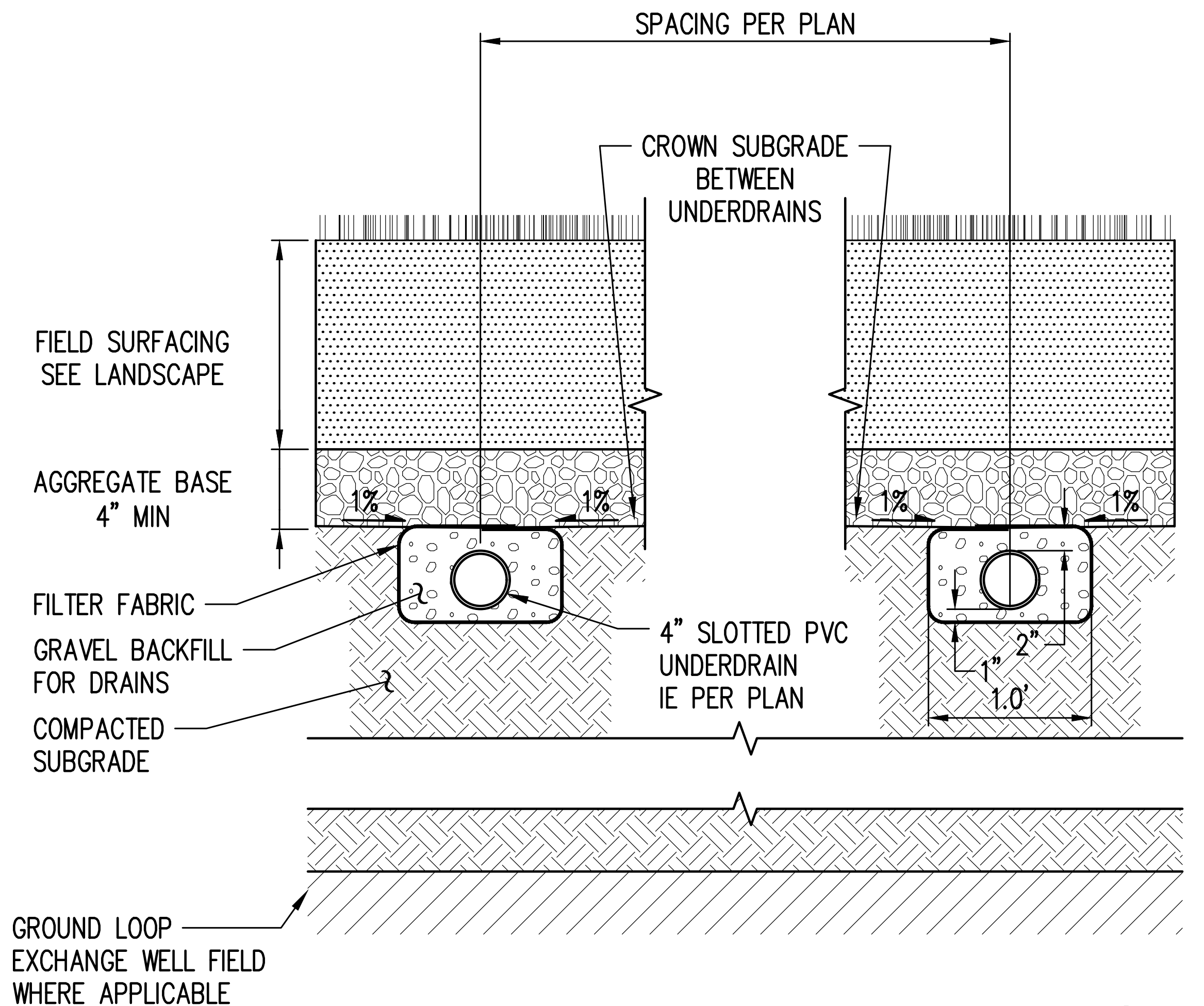

FIELD UNDERDRAIN
NTS
1
C501, C503, C504

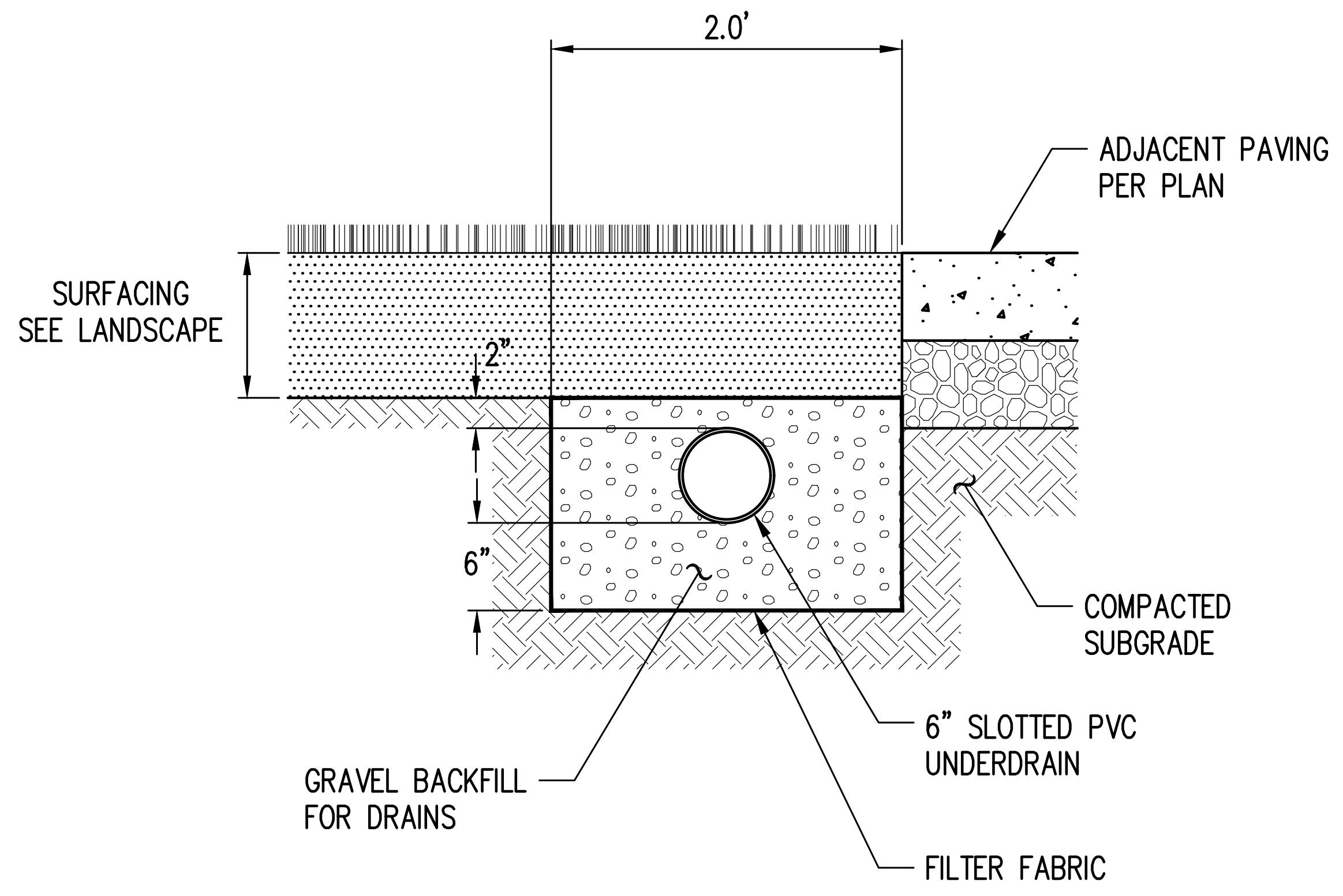

FRENCH DRAIN AT PAVEMENT EDGE
NTS
2
C502, C504

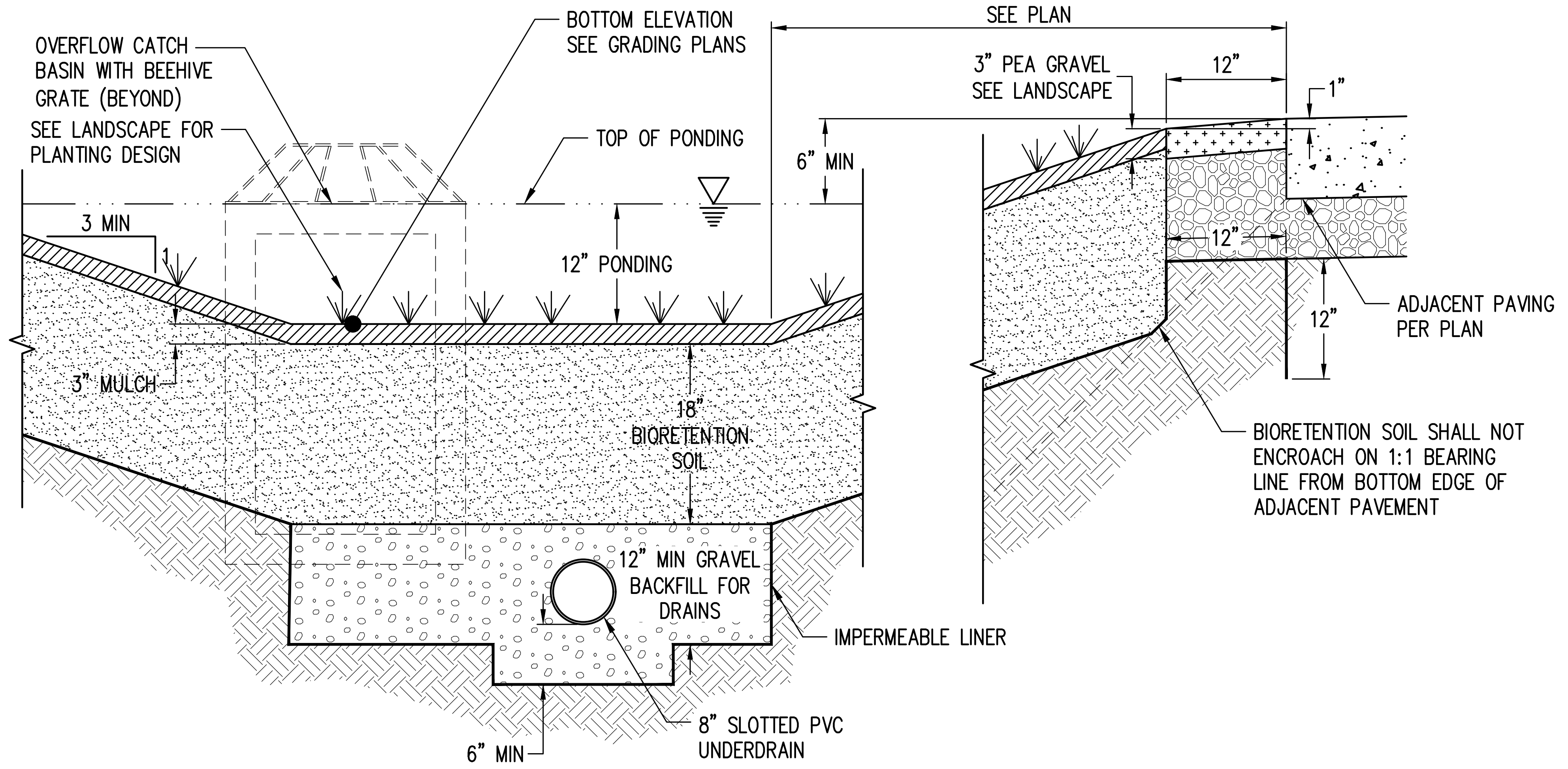

BIORETENTION CELL
NTS
3
C501, C503

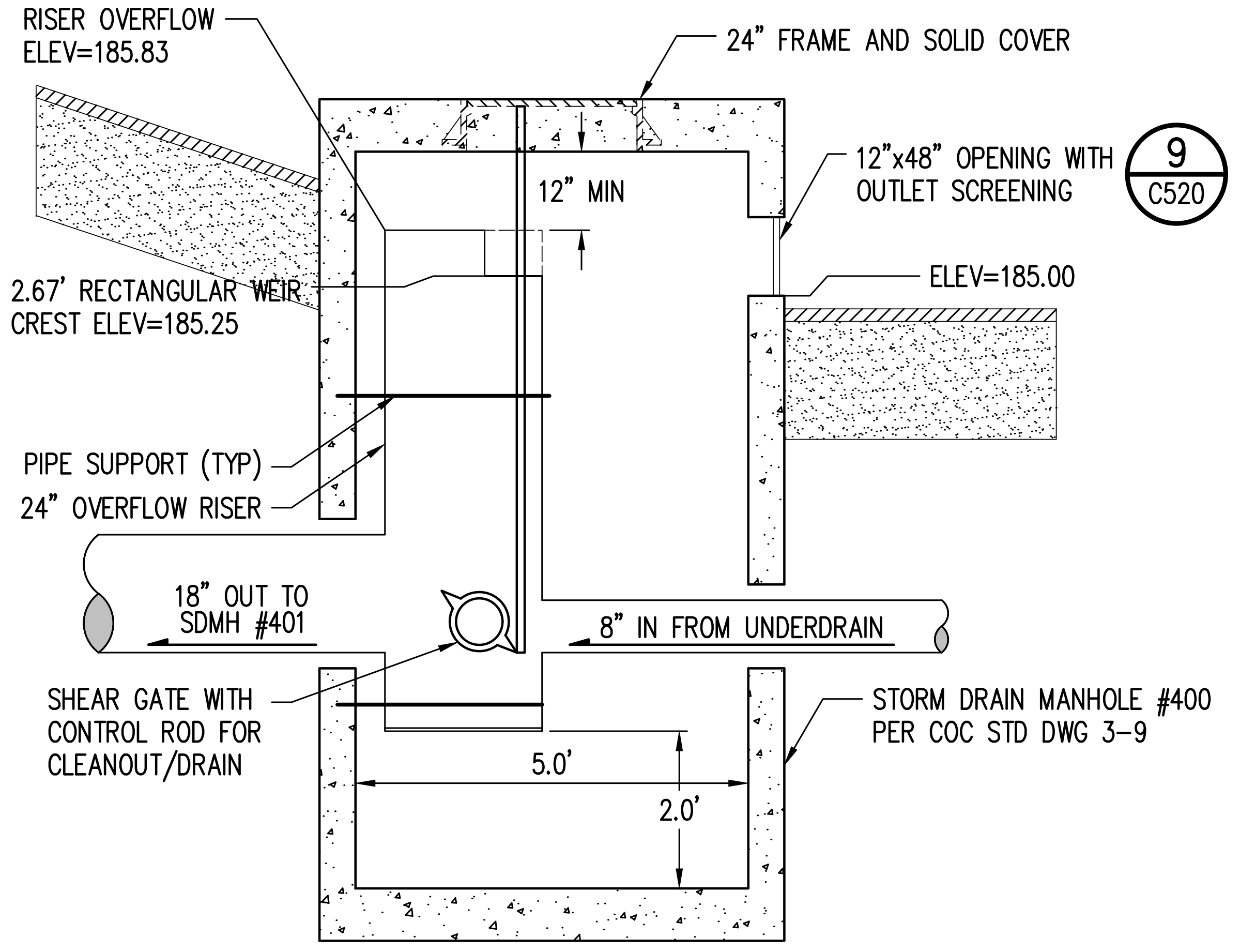

STORM DRAIN MANHOLE #400
1" = 2'
4
C503, C530

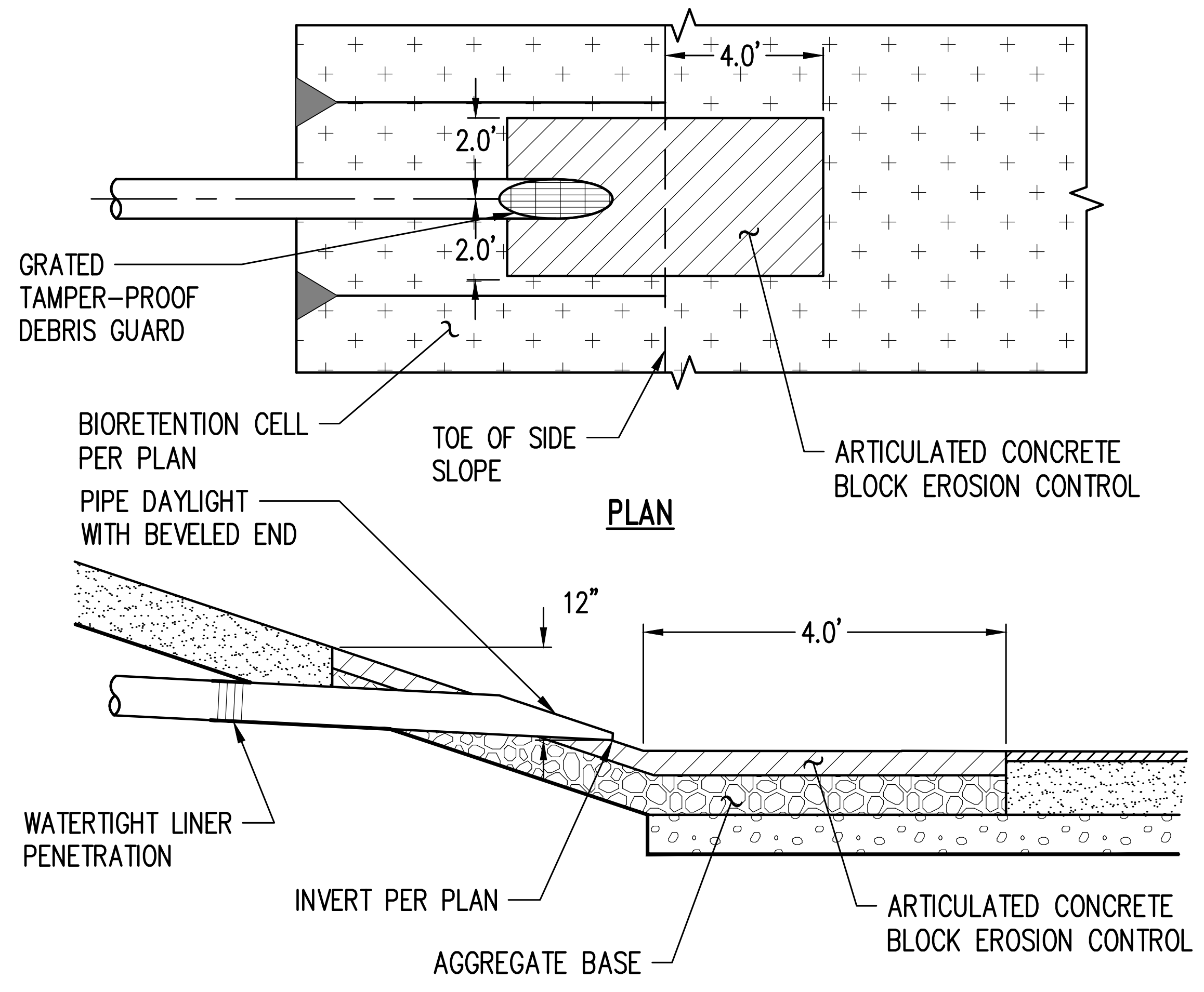

STORM DRAIN PIPE DAYLIGHT
NTS
5
C501-C504

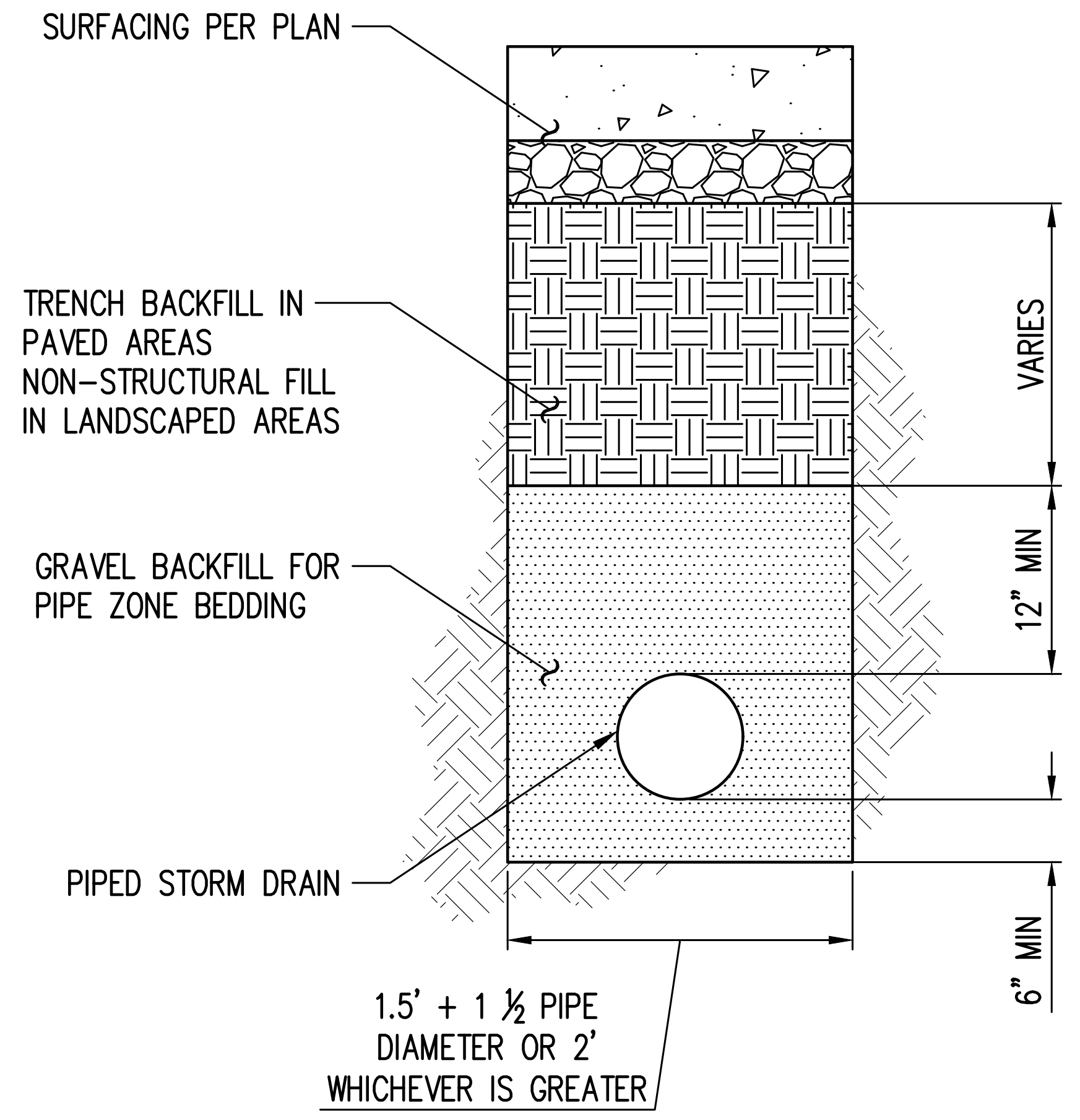

TYPICAL STORM DRAIN TRENCH
NTS
6
C501-C504

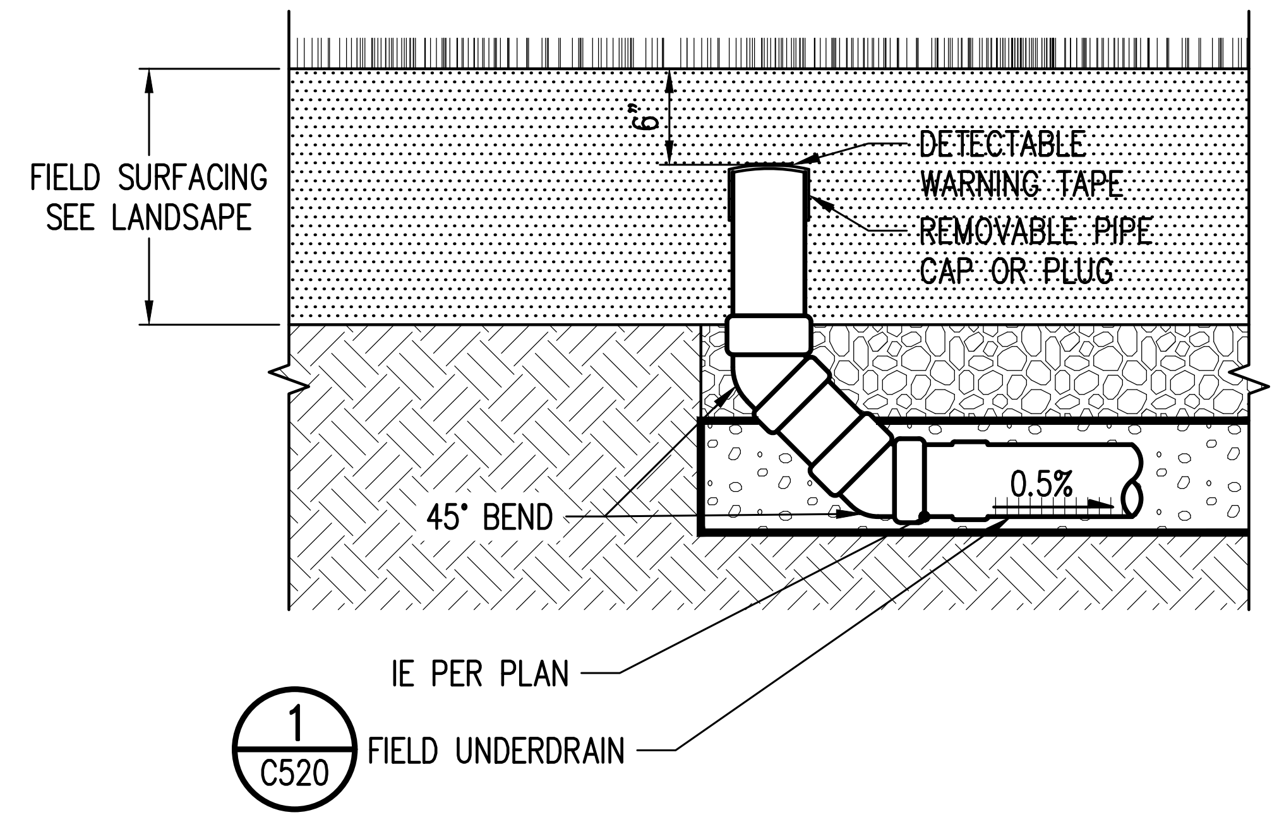

FIELD DRAIN CLEANOUT
NTS
7
C501-C504

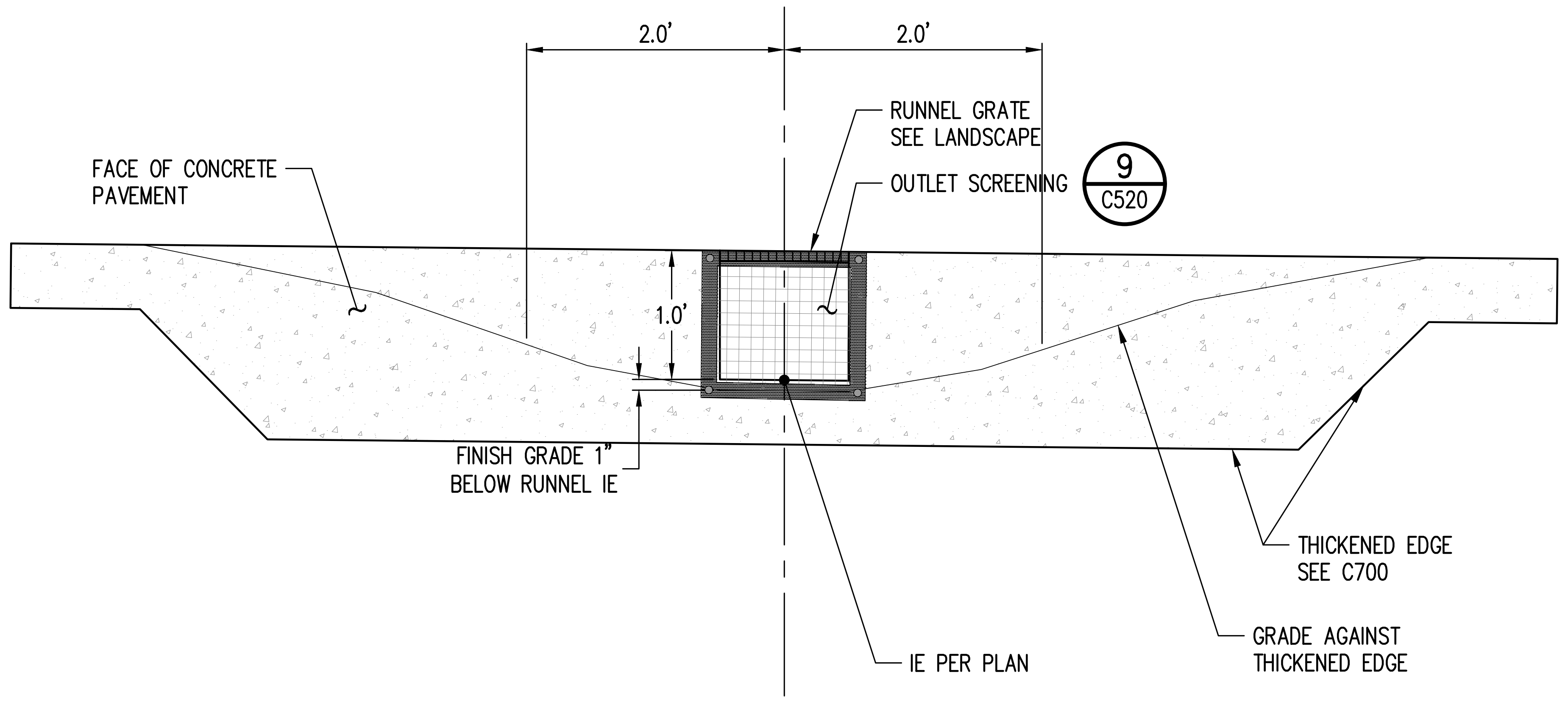

RUNNEL END
1" = 1'
8
C503

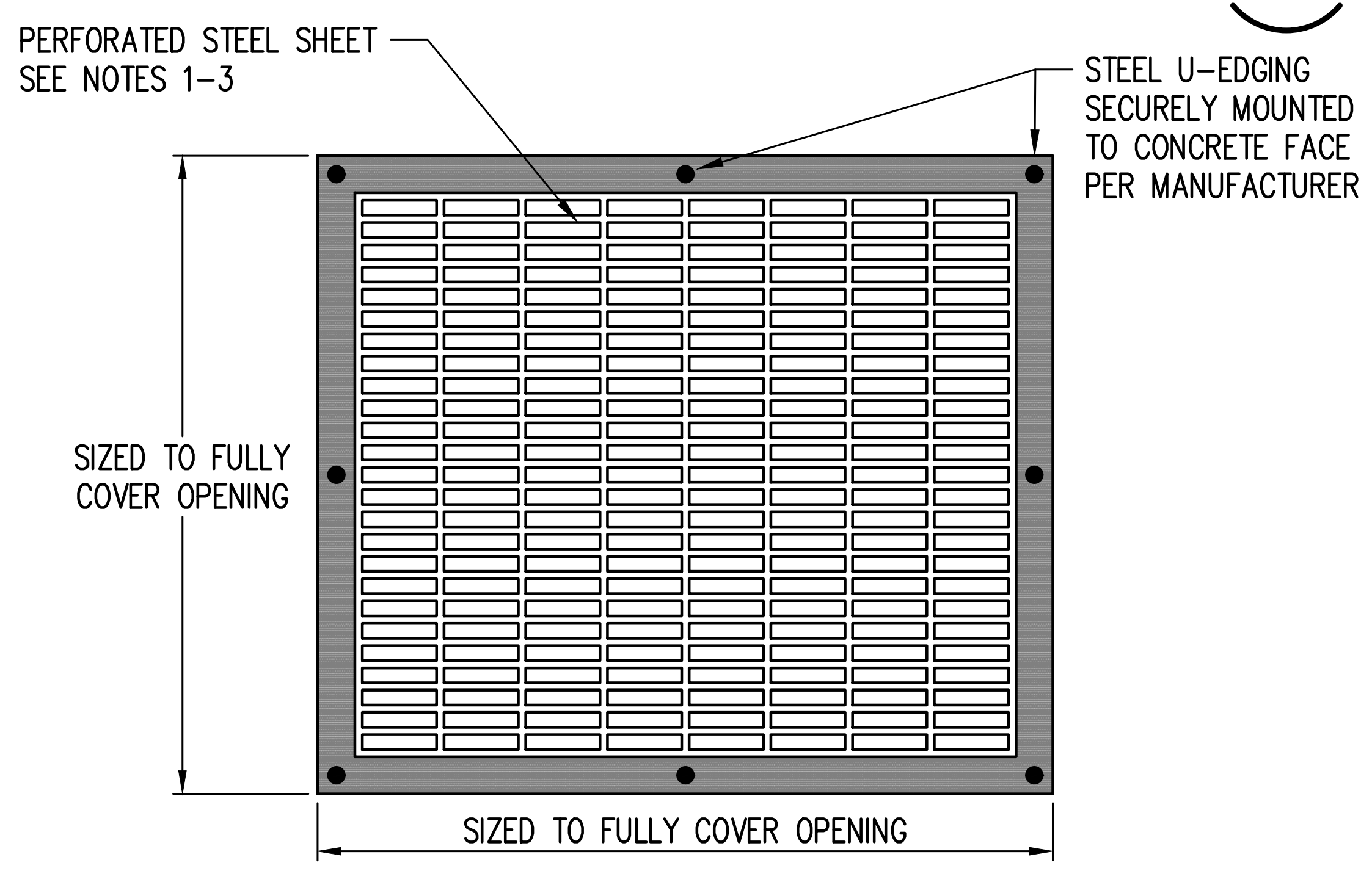

NOTES:
1. STEEL SHEET SHALL BE MINIMUM 16 GAUGE THICKNESS AND HAVE A RECTANGULAR PERFORATION PATTERN.
2. PERFORATION WIDTH SHALL BE 1" MIN AND 2" MAX. PERFORATION HEIGHT SHALL BE 0.5" MIN AND 1" MAX.
3. PERFORATION PATTERN SHALL HAVE 75% MINIMUM OPEN LENGTH IN THE HORIZONTAL DIRECTION, AND 60% MINIMUM OPEN LENGTH IN THE VERTICAL DIRECTION.

OUTLET SCREENING
NTS
9
C520

BIORETENTION CELL SUMMARY

BIORETENTION CELL	PONDING DEPTH (IN)	SIDE SLOPES (H:V)	BOTTOM AREA (SF)	AREA BELOW RISER CREST (SF)
A	12	3:1	895	1412
B	12	3:1	497	899
C	12	3:1	827	1575
D	12	3:1	1031	1560
E	12	3:1	331	736
TOTAL	–	–	3581	6182

BIORETENTION CELL SUMMARY
NTS
10
C500

811 Call 811 two business days before you dig

DLR Group
© DLR Group

PRELIMINARY

kpff
1601 5th Avenue, Suite 1600
Seattle, WA 98101
206.622.5822
www.kpff.com

Washington State Department of CHILDREN, YOUTH & FAMILIES

GREEN HILL SCHOOL RECREATION BUILDING
375 SW 11TH STREET
CHEHALIS, WA 98532

85% CONSTRUCTION DOCUMENTS
February 5, 2021
Revisions

73-18130-00

STORM DRAIN DETAILS

C520

\\kpff.com\Civil\1800001-1800999\1800416 GHS Recreation Building Replacement\CAD\Design\03 - CD\C520 STRM DETL.dwg
BrodyR
Feb 26, 2021 – 12:29pm

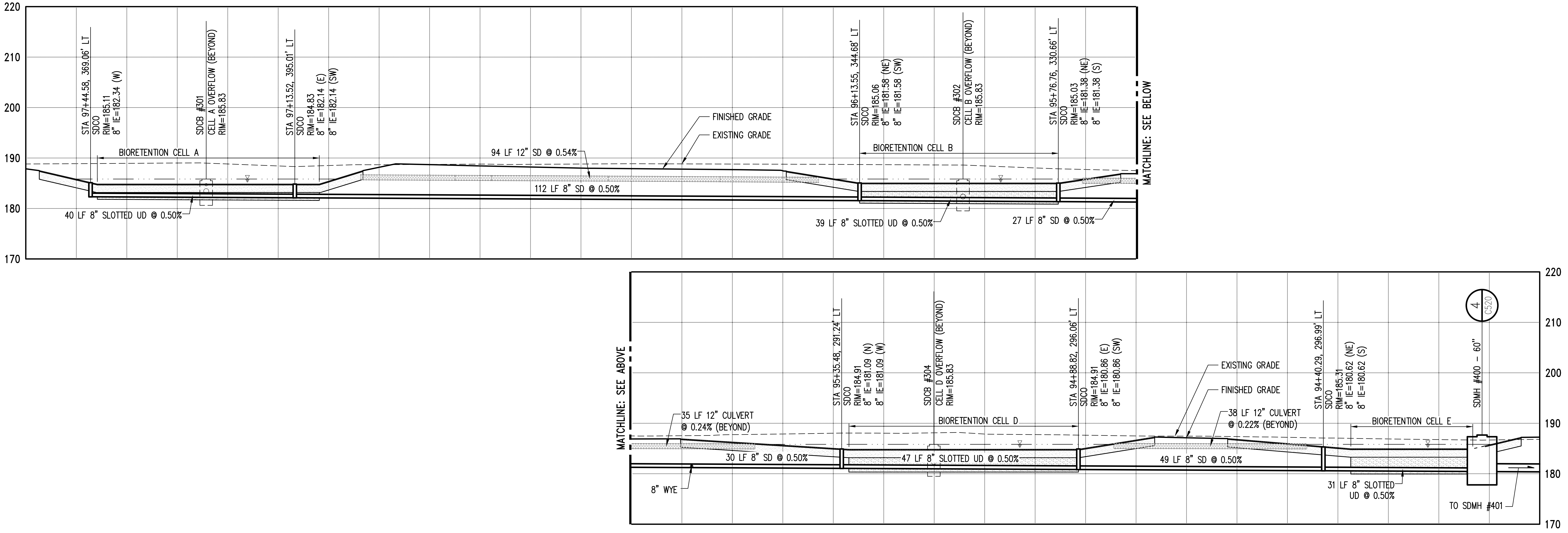

BIORETENTION FACILITY PROFILE

SCALE: 1" = 10' H, 1" = 10' V

1
C501, C503

DLR Group
© DLR Group

PRELIMINARY
MARTIN F. CHASE
28482

kpff
1601 5th Avenue, Suite 1600
Seattle, WA 98101
206.622.5822
www.kpff.com

Washington State Department of
CHILDREN, YOUTH & FAMILIES

GREEN HILL SCHOOL RECREATION BUILDING
375 SW 11TH STREET
CHEHALIS, WA 98532

85% CONSTRUCTION DOCUMENTS
February 5, 2021
Revisions

73-18130-00

STORM DRAIN PROFILES

C530

Call 811
two business days before you dig

Feb 26, 2021 – 12:29am BradyR \\kpff.com\Civil\1800001-1800999\1800416 GHS Recreation Building Replacement\CADD\Design\03 – CD\C530 STRM PROF.dwg

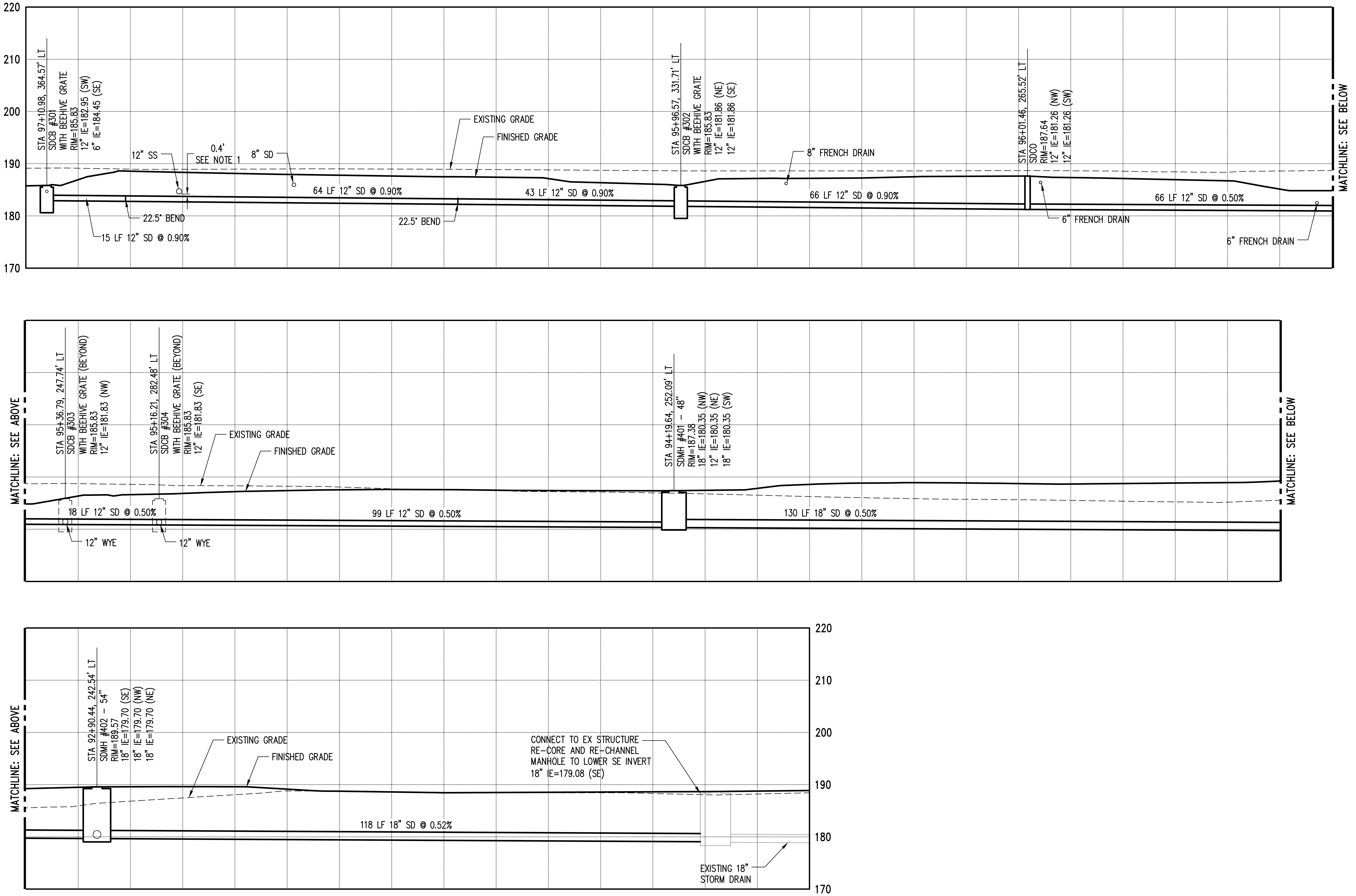

NOTE:
1. WHERE SEWER AND STORM DRAIN CROSS WITH LESS THAN 6 INCHES OF CLEARANCE, POLYETHYLENE FOAM MUST BE PLACED BETWEEN PIPES AS CUSHIONING BEFORE BACKFILLING.

OVERFLOW SYSTEM PROFILE
SCALE: 1" = 10' H, 1" = 10' V
2
C501, C503

Call 811
two business days
before you dig

DLR Group
© DLR Group

PRELIMINARY

kpff
1601 5th Avenue, Suite 1600
Seattle, WA 98101
206.622.5822
www.kpff.com

Washington State Department of
CHILDREN, YOUTH & FAMILIES

GREEN HILL SCHOOL RECREATION
BUILDING
375 SW 11TH STREET
CHEHALIS, WA 98532

85% CONSTRUCTION
DOCUMENTS
February 5, 2021
Revisions

73-18130-00

STORM DRAIN
PROFILES

C531

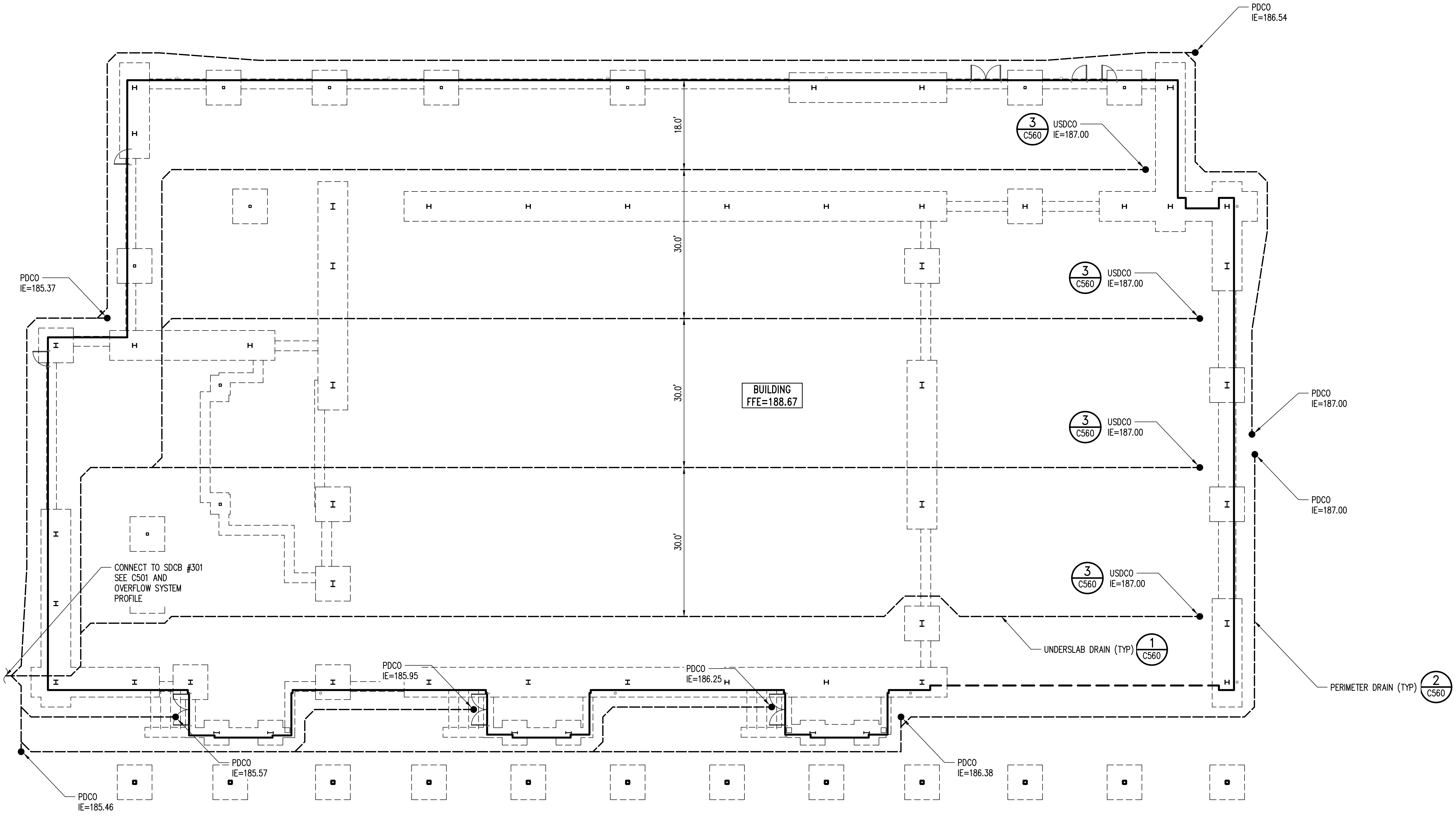

NOTES

1. THIS PLAN MEETS THE MINIMUM REQUIREMENTS FOR GROUNDWATER CONTROL AS RECOMMENDED IN THE GEOTECHNICAL ENGINEERING REPORT BY HART CROWSER INC. THE CONTRACTOR SHALL VERIFY LOCATIONS WITH THE GEOTECHNICAL REPRESENTATIVE IN THE FIELD, AND ADJUST OR INCREASE THEM TO OBTAIN FULL COVERAGE FOR GROUNDWATER CONTROL.
2. FOUNDATIONS, FOOTINGS, AND SHORING ARE SHOWN FOR GRAPHICAL REPRESENTATIONS ONLY. SEE STRUCTURAL AND SHORING PLANS FOR DESIGN.
3. INVERT ELEVATIONS FOR PIPES BELOW SLAB SHALL BE A MINIMUM 20 INCHES BELOW TOP OF SLAB, UNLESS NOTED OTHERWISE.
4. CONTRACTOR SHALL PROVIDE SLEEVES, AS REQUIRED, FOR PVC PIPE CROSSING THROUGH OR UNDER CONCRETE WALLS AND FOUNDATION ELEMENTS. CONTRACTOR SHALL COORDINATE THE LOCATION OF SLEEVES WITH THE STRUCTURAL ENGINEER.
5. EXCAVATIONS FOR DRAINAGE SYSTEM THAT EXTEND BELOW THE 1:1 LOAD ZONE OF THE ADJACENT FOOTINGS SHALL BE BACKFILLED W/ CONTROLLED DENSITY FILL (CDF). SEE STRUCTURAL PLANS FOR FOOTING LOCATIONS & SIZES.

LEGEND

━━━━	BUILDING LINE
– – – –	PERFORATED STORM DRAIN
•	FOUNDATION DRAINAGE CLEANOUT

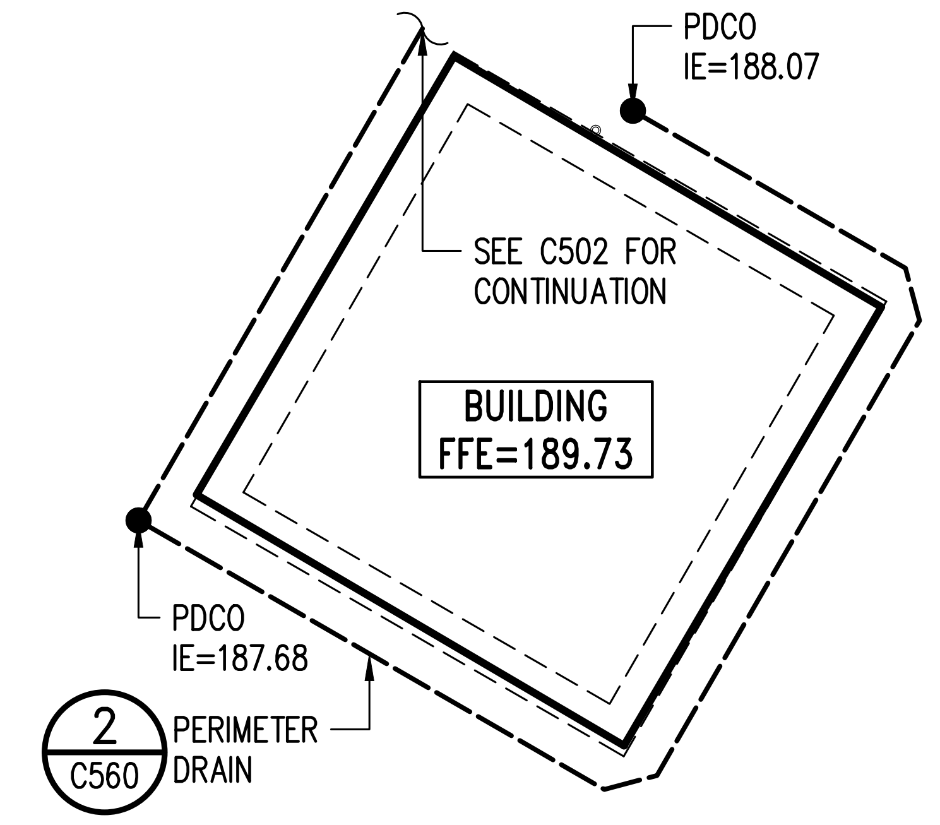

FOUNDATION DRAINAGE
AT FIELD STORAGE BUILDING
1"=10'
A
C550

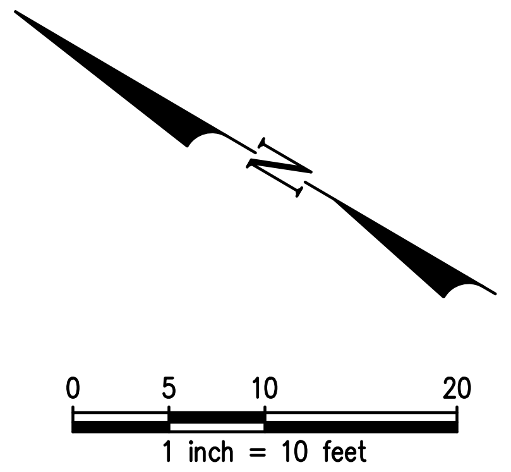

811 Call 811
two business days
before you dig

DLR Group
© DLR Group

PRELIMINARY
MARTIN F. CHASE
STATE OF WASHINGTON
23482
REGISTERED
PROFESSIONAL ENGINEER

kpff
1601 5th Avenue, Suite 1600
Seattle, WA 98101
206.622.5822
www.kpff.com

Washington State Department of
CHILDREN, YOUTH & FAMILIES

GREEN HILL SCHOOL RECREATION BUILDING
375 SW 11TH STREET
CHEHALIS, WA 98532

85% CONSTRUCTION DOCUMENTS
February 5, 2021
Revisions

73-18130-00

FOUNDATION DRAINAGE PLAN

C550

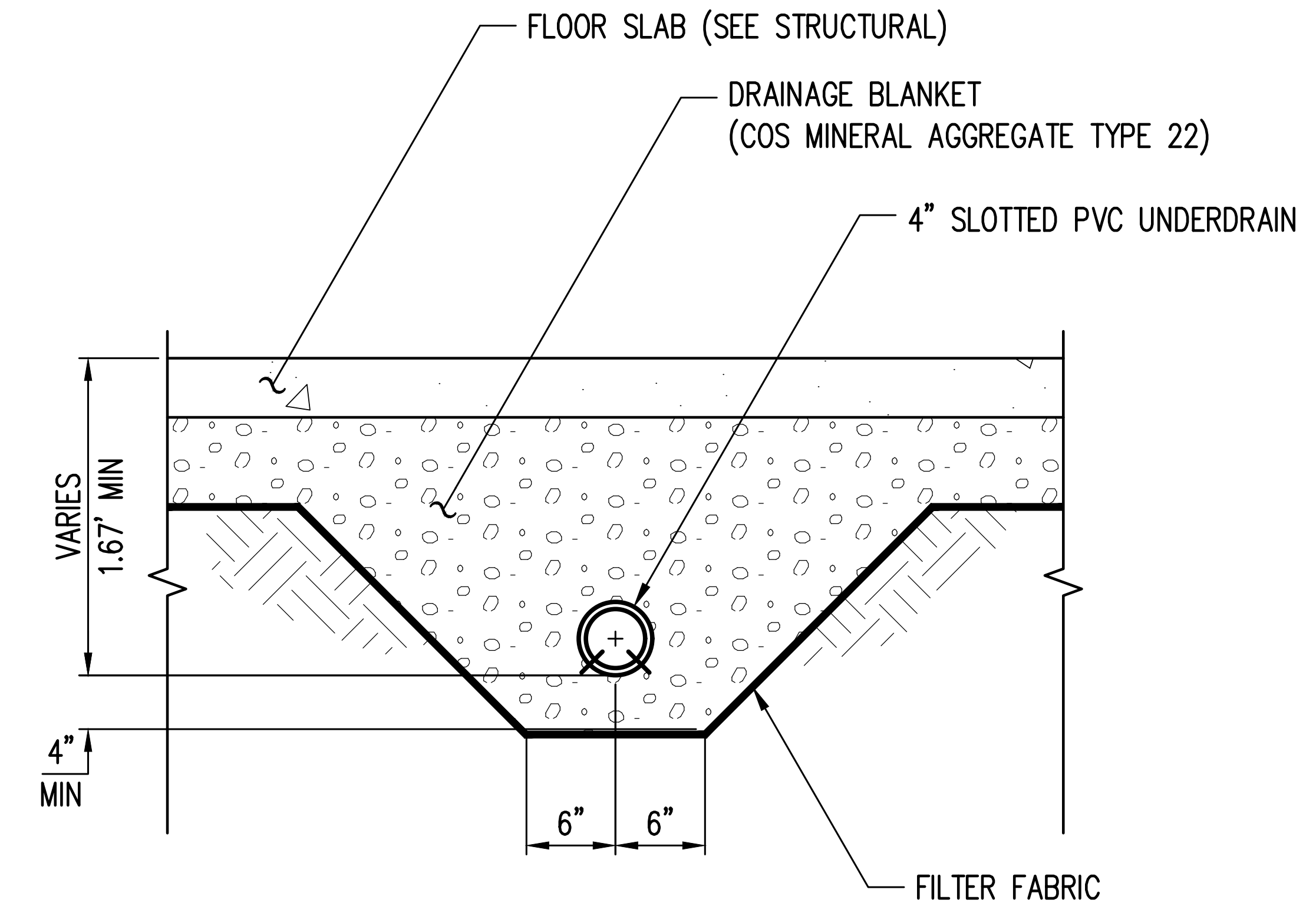

UNDERSLAB DRAIN

NTS

1
C550

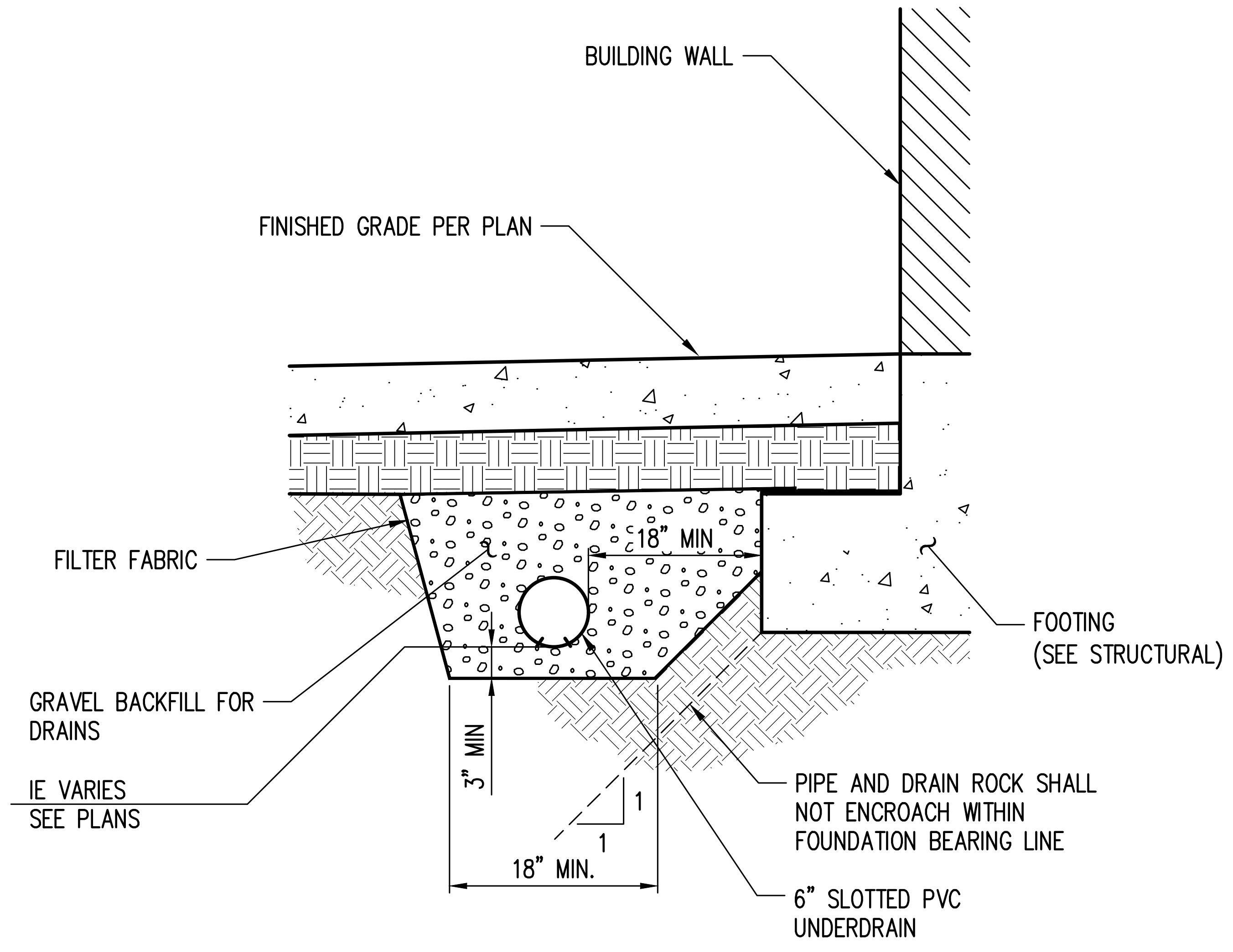

PERIMETER DRAIN

NTS

2
C550

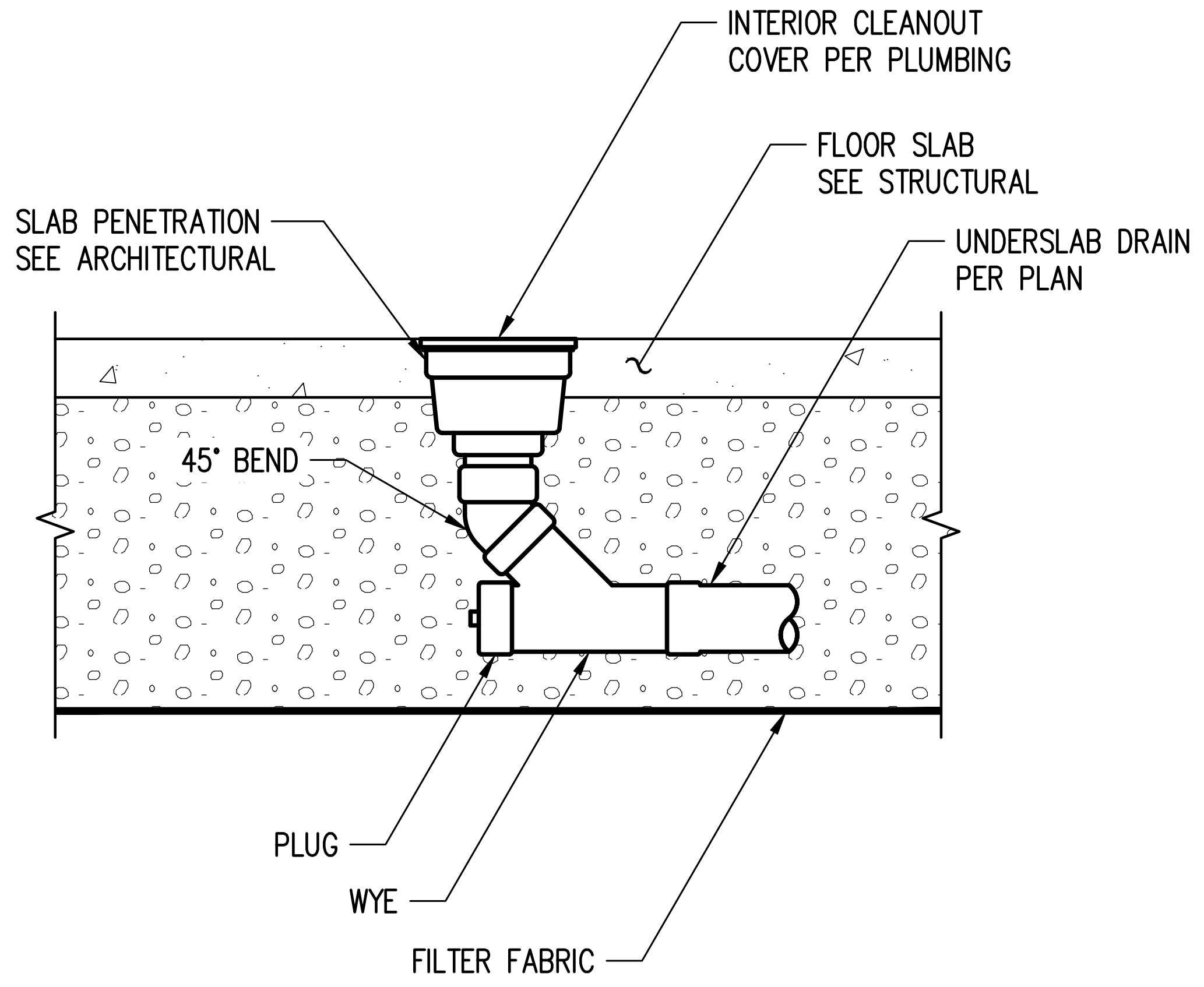

UNDERSLAB DRAIN CLEANOUT

SCALE: 1" = 1'

3
C550

DLR Group
© DLR Group

MARTIN F. CHASE
STATE OF WASHINGTON
28482
REGISTERED
PROFESSIONAL ENGINEER
PRELIMINARY

kpff
1601 5th Avenue, Suite 1600
Seattle, WA 98101
206.622.5822
www.kpff.com

Washington State Department of
CHILDREN, YOUTH & FAMILIES

GREEN HILL SCHOOL RECREATION
BUILDING

375 SW 11TH STREET
CHEHALIS, WA 98532

85% CONSTRUCTION
DOCUMENTS
February 5, 2021
Revisions

73-18130-00

FOUNDATION
DRAINAGE
DETAILS

Call 811
two business days
before you dig

C560

\\kpff.com\Civil\1800001-1800999\1800416 GHS Recreation Building Replacement\CAD\Design\03 - CD\C560 FNDN DETL.dwg

BrodyR

Feb 26, 2021 - 12:30pm

Appendix D

Sedimentation Volume Calculations

SEDIMENTATION TANK CALCS

MGS FLOOD
PROJECT REPORT

Program Version: MGSFlood 4.52
Program License Number: 200410007
Project Simulation Performed on: 02/25/2021 11:57 PM
Report Generation Date: 02/25/2021 11:58 PM

Input File Name:	GHSModeling_20200504.fld
Project Name:	GHS Rec Building
Analysis Title:	Sedimentation Tank
Comments:	.

PRECIPITATION INPUT

Computational Time Step (Minutes): 15

Extended Precipitation Time Series Selected
Climatic Region Number: 5

Full Period of Record Available used for Routing
Precipitation Station : 95004805 Puget West 48 in_5min 10/01/1939-10/01/2097
Evaporation Station : 951048 Puget West 48 in MAP
Evaporation Scale Factor : 0.750

HSPF Parameter Region Number: 1
HSPF Parameter Region Name : USGS Default

********** Default HSPF Parameters Used (Not Modified by User) ***************

********************** WATERSHED DEFINITION ***********************

Predevelopment/Post Development Tributary Area Summary

	Predeveloped	Post Developed
Total Subbasin Area (acres)	7.887	7.887
Area of Links that Include Precip/Evap (acres)	0.000	0.000
Total (acres)	7.887	7.887

----------------------SCENARIO: PREDEVELOPED
Number of Subbasins: 1

---------- Subbasin : Project Site ----------

	-------Area (Acres) --------
Till Grass	7.535
Impervious	0.353
Subbasin Total	7.887

----------------------SCENARIO: POSTDEVELOPED
Number of Subbasins: 1

---------- Subbasin : Construction Stormwater ----------

	-------Area (Acres) --------
Till Grass	5.803
Impervious	2.084
Subbasin Total	7.887

************************ LINK DATA *******************************

----------------------SCENARIO: PREDEVELOPED
Number of Links: 0

**************************** LINK DATA *******************************

--------------------SCENARIO: POSTDEVELOPED
Number of Links: 1

--
Link Name: Project POC
Link Type: Copy
Downstream Link: None

**********************FLOOD FREQUENCY AND DURATION STATISTICS*******************

---------------------SCENARIO: PREDEVELOPED
Number of Subbasins: 1
Number of Links: 0

---------------------SCENARIO: POSTDEVELOPED
Number of Subbasins: 1
Number of Links: 1

***********Groundwater Recharge Summary *************
Recharge is computed as input to Perlnd Groundwater Plus Infiltration in Structures

Total Predeveloped Recharge During Simulation

Model Element	Recharge Amount (ac-ft)
Subbasin: Project Site	1004.954
Total:	1004.954

Total Post Developed Recharge During Simulation

Model Element	Recharge Amount (ac-ft)
Subbasin: Construction Stormwa	773.996
Link: Project POC	0.000
Total:	773.996

Total Predevelopment Recharge is Greater than Post Developed
Average Recharge Per Year, (Number of Years= 158)
Predeveloped: 6.360 ac-ft/year, Post Developed: 4.899 ac-ft/year

***********Water Quality Facility Data *************

---------------------SCENARIO: PREDEVELOPED

Number of Links: 0

---------------------SCENARIO: POSTDEVELOPED

Number of Links: 1

********** Link: Project POC   **********

Infiltration/Filtration Statistics--------------------
Inflow Volume (ac-ft): 2914.43
Inflow Volume Including PPT-Evap (ac-ft): 2914.43
Total Runoff Infiltrated (ac-ft): 0.00, 0.00%
Total Runoff Filtered (ac-ft): 0.00, 0.00%
Primary Outflow To Downstream System (ac-ft): 2914.43
Secondary Outflow To Downstream System (ac-ft): 0.00
Percent Treated (Infiltrated+Filtered)/Total Volume: 0.00%

SEDIMENTATION TANK CALCS

```
***********Compliance Point Results *************

Scenario Predeveloped Compliance Subbasin: Project Site

Scenario Postdeveloped Compliance Link: Project POC

    *** Point of Compliance Flow Frequency Data ***
    Recurrence Interval Computed Using Gringorten Plotting Position

        Predevelopment Runoff                    Postdevelopment Runoff
Tr (Years)       Discharge (cfs)            Tr (Years)       Discharge (cfs)
-----------------------------------------------------------------------------------------------
  2-Year             1.331            2-Year             1.793
  5-Year             2.098            5-Year             2.566
  10-Year            2.632            10-Year            3.140
  25-Year            3.482            25-Year            4.048
  50-Year            3.828            50-Year            4.473
  100-Year           5.149            100-Year           5.590
  200-Year           5.298            200-Year           5.837
  500-Year           5.456            500-Year           6.135
 ** Record too Short to Compute Peak Discharge for These Recurrence Intervals


**** Flow Duration Performance ****
Excursion at Predeveloped 50%Q2 (Must be Less Than or Equal to 0%):              229.8%   FAIL
Maximum Excursion from 50%Q2 to Q2 (Must be Less Than or Equal to 0%):           229.8%   FAIL
Maximum Excursion from Q2 to Q50 (Must be less than 10%):                      99999.0%   FAIL
Percent Excursion from Q2 to Q50 (Must be less than 50%):                        100.0%   FAIL

-------------------------------------------------------------------------------
FLOW DURATION DESIGN CRITERIA:   FAIL
-------------------------------------------------------------------------------


**** LID Duration Performance ****
Excursion at Predeveloped 8%Q2 (Must be Less Than 0%):                   19.5%        FAIL
Maximum Excursion from 8%Q2 to 50%Q2 (Must be Less Than 0%):            254.2%        FAIL

-------------------------------------------------------------------------------
LID DURATION DESIGN CRITERIA:     FAIL
-------------------------------------------------------------------------------
```

SEDIMENTATION VOLUME CALCULATIONS PER DOE SWMMWW BMP C241:

SURFACE AREA = 2080 SF/CFS*Q2
Q2=1.793 CFS

SA = 2080*1.793 = 3729.44 SF

TANK VOLUME = SA*DEPTH
= (3729.44 SF)*(3.5 FT)
= 13053.04 CF
= 97,644 GALLONS

SEDIMENT TANK MIN VOLUME = 98,000 GALLONS

Appendix E

Runoff Treatment Calculations

RUNOFF TREATMENT CALCS

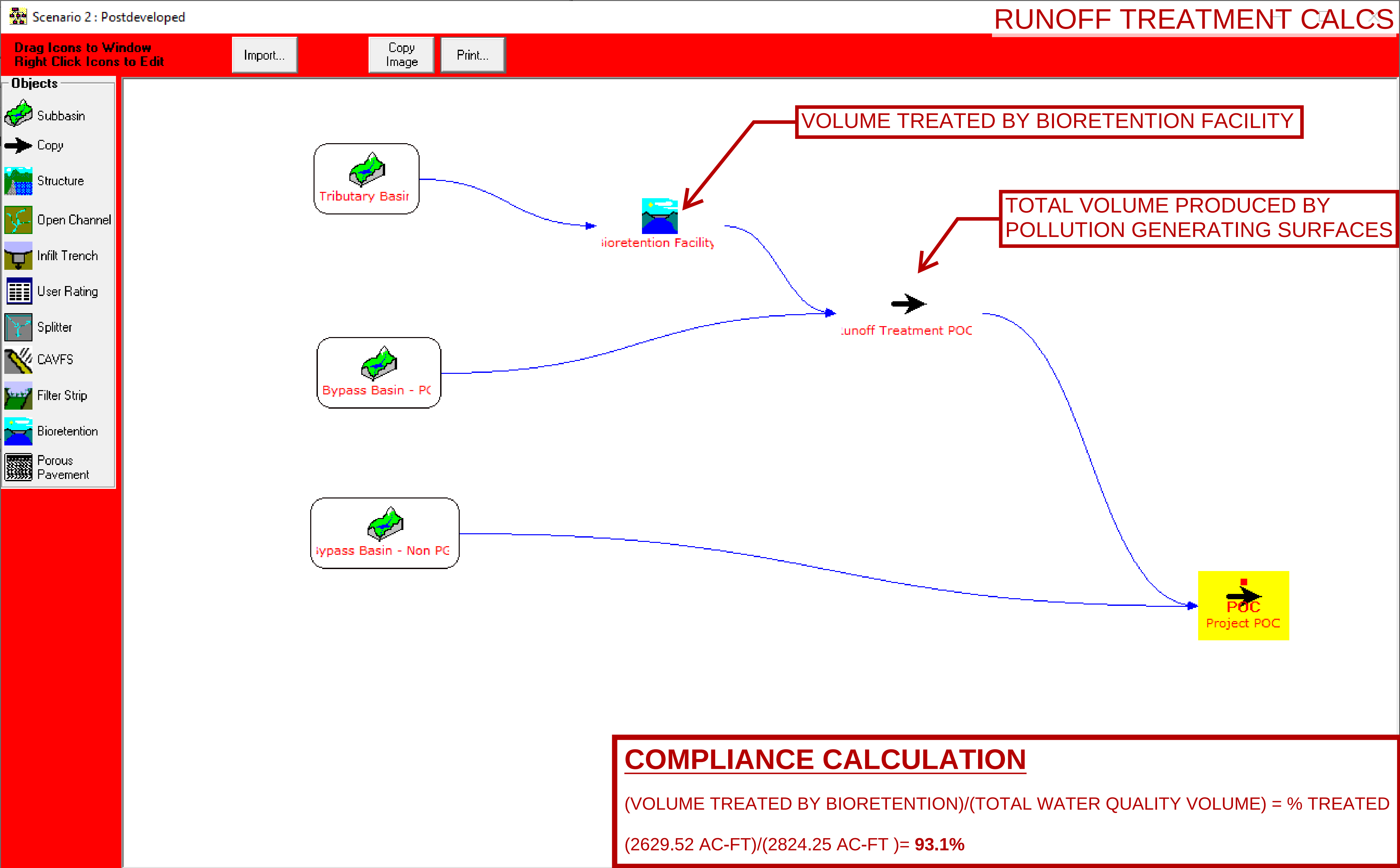

VOLUME TREATED BY BIORETENTION FACILITY

TOTAL VOLUME PRODUCED BY POLLUTION GENERATING SURFACES

COMPLIANCE CALCULATION

(VOLUME TREATED BY BIORETENTION)/(TOTAL WATER QUALITY VOLUME) = % TREATED

(2629.52 AC-FT)/(2824.25 AC-FT)= **93.1%**

RUNOFF TREATMENT CALCS

MGS FLOOD
PROJECT REPORT

Program Version: MGSFlood 4.52
Program License Number: 200410007
Project Simulation Performed on: 02/25/2021 10:27 PM
Report Generation Date: 02/25/2021 10:28 PM

Input File Name: GHS_WaterQuality.fld
Project Name: GHS Rec Building
Analysis Title: 60% CD Model
Comments: .

PRECIPITATION INPUT

Computational Time Step (Minutes): 15

Extended Precipitation Time Series Selected
Climatic Region Number: 5

Full Period of Record Available used for Routing
Precipitation Station : 95004805 Puget West 48 in_5min 10/01/1939-10/01/2097
Evaporation Station : 951048 Puget West 48 in MAP
Evaporation Scale Factor : 0.750

HSPF Parameter Region Number: 1
HSPF Parameter Region Name : USGS Default

********** Default HSPF Parameters Used (Not Modified by User) ***************

********************* WATERSHED DEFINITION **********************

Predevelopment/Post Development Tributary Area Summary

	Predeveloped	Post Developed
Total Subbasin Area (acres)	7.887	7.814
Area of Links that Include Precip/Evap (acres)	0.000	0.074
Total (acres)	7.887	7.888

----------------------SCENARIO: PREDEVELOPED

Number of Subbasins: 1

---------- Subbasin : Project Site ----------

-------Area (Acres) --------	
Till Grass	7.535
Impervious	0.353
Subbasin Total	7.887

----------------------SCENARIO: POSTDEVELOPED

Number of Subbasins: 3

---------- Subbasin : Tributary Basin ----------

-------Area (Acres) --------	
Till Grass	5.730
Impervious	1.753
Subbasin Total	7.483

---------- Subbasin : Bypass Basin - PG ----------

-------Area (Acres) --------	
Impervious	0.140
Subbasin Total	0.140

```
 ---------- Subbasin : Bypass Basin - Non PG ----------
                    -------Area (Acres) --------
Impervious                     0.191
-------------------------------------------------
Subbasin Total                 0.191



************************ LINK DATA ******************************

----------------------SCENARIO: PREDEVELOPED
Number of Links:  0


************************ LINK DATA ******************************

----------------------SCENARIO: POSTDEVELOPED
Number of Links:  3


------------------------------------------
Link Name: Bioretention Facility
Link Type:  Bioretention Facility
Downstream Link Name: Runoff Treatment POC

Base Elevation (ft)                :    184.83
Riser Crest Elevation (ft)                      :    185.83
Storage Depth (ft)                 :   1.00
Bottom Length (ft)                 :    322.3
Bottom Width (ft)                  :    10.0
Side Slopes (ft/ft)                : L1= 3.00   L2= 3.00  W1= 3.00  W2= 3.00
Bottom Area (sq-ft)                :    3223.
Area at Riser Crest El (sq-ft)     :    5,253.
                          (acres)  :     0.121
Volume at Riser Crest (cu-ft)      :    5,199.
                          (ac-ft)  :    0.119

Infiltration on Bottom and Sideslopes Selected

Soil Properties
Biosoil Thickness (ft)                                :      1.50
Biosoil Saturated Hydraulic Conductivity (in/hr)      :      3.00
Biosoil Porosity (Percent)                            :      20.00
Maximum Elevation of Bioretention Soil   : 186.33
Native Soil Hydraulic Conductivity (in/hr)            :      0.00

Underdrain Present
Orifice NOT Present in Under Drain

Riser Geometry
Riser Structure Type               : Circular
Riser Diameter (in)                : 24.00
Common Length (ft)                 : 2.670
Riser Crest Elevation              : 185.83 ft

 Hydraulic Structure Geometry

Number of Devices:     1

     --- Device Number   1 ---
Device Type               : Rectangular Weir that Intersects the Riser Top
Invert Elevation (ft)     :  185.25
Length (ft)               :   2.670


------------------------------------------
Link Name: Runoff Treatment POC
Link Type:  Copy
Downstream Link Name: Project POC
```

```
-----------------------------------------
Link Name: Project POC
Link Type:  Copy
Downstream Link: None


**********************FLOOD FREQUENCY AND DURATION STATISTICS*******************

---------------------SCENARIO: PREDEVELOPED
Number of Subbasins:  1
Number of Links:  0


---------------------SCENARIO: POSTDEVELOPED
Number of Subbasins:  3
Number of Links:  3

********** Subbasin: Tributary Basin **********

 Flood Frequency Data(cfs)
 (Recurrence Interval Computed Using Gringorten Plotting Position)
Tr (yrs)       Flood Peak (cfs)
========================================
   2-Year          1.629
   5-Year          2.384
   10-Year         2.890
   25-Year         3.762
   50-Year         4.144
   100-Year        5.267
   200-Year        5.461
   500-Year        5.684


********** Subbasin: Bypass Basin - PG **********

 Flood Frequency Data(cfs)
 (Recurrence Interval Computed Using Gringorten Plotting Position)
Tr (yrs)       Flood Peak (cfs)
========================================
   2-Year          6.191E-02
   5-Year          7.747E-02
   10-Year         9.095E-02
   25-Year         0.110
   50-Year         0.125
   100-Year        0.148
   200-Year        0.150
   500-Year        0.153


********** Subbasin: Bypass Basin - Non PG **********

 Flood Frequency Data(cfs)
 (Recurrence Interval Computed Using Gringorten Plotting Position)
Tr (yrs)       Flood Peak (cfs)
========================================
   2-Year          8.447E-02
   5-Year          0.106
   10-Year         0.124
   25-Year         0.150
   50-Year         0.171
   100-Year        0.202
   200-Year        0.205
   500-Year        0.209



********** Link: Bioretention Facility                    **********    Link Inflow Frequency Stats
 Flood Frequency Data(cfs)
 (Recurrence Interval Computed Using Gringorten Plotting Position)
```

```
Tr (yrs)       Flood Peak (cfs)
========================================
   2-Year          1.629
   5-Year          2.384
   10-Year         2.890
   25-Year         3.762
   50-Year         4.144
   100-Year        5.267
   200-Year        5.461
   500-Year        5.684



********** Link: Bioretention Facility                        **********    Link Outflow 1 Frequency Stats
 Flood Frequency Data(cfs)
 (Recurrence Interval Computed Using Gringorten Plotting Position)
Tr (yrs)       Flood Peak (cfs)
========================================
   2-Year          1.264
   5-Year          2.041
   10-Year         2.456
   25-Year         3.316
   50-Year         3.811
   100-Year        4.046
   200-Year        4.186
   500-Year        4.368



********** Link: Bioretention Facility                        **********    Link WSEL Stats
 WSEL Frequency Data(ft)
 (Recurrence Interval Computed Using Gringorten Plotting Position)
Tr (yrs)       WSEL Peak (ft)
========================================
   1.05-Year       185.325
   1.11-Year       185.343
   1.25-Year       185.393
   2.00-Year       185.477
   3.33-Year       185.541
      5-Year       185.589
     10-Year       185.641
     25-Year       185.743
     50-Year       185.797
   100-Year        185.822



********** Link: Runoff Treatment POC                          **********    Link Inflow Frequency Stats
 Flood Frequency Data(cfs)
 (Recurrence Interval Computed Using Gringorten Plotting Position)
Tr (yrs)       Flood Peak (cfs)
========================================
   2-Year          1.308
   5-Year          2.099
   10-Year         2.524
   25-Year         3.417
   50-Year         3.900
   100-Year        4.159
   200-Year        4.281
   500-Year        4.438



********** Link: Runoff Treatment POC                          **********    Link Outflow 1 Frequency Stats
 Flood Frequency Data(cfs)
 (Recurrence Interval Computed Using Gringorten Plotting Position)
Tr (yrs)       Flood Peak (cfs)
========================================
   2-Year          1.308
   5-Year          2.099
   10-Year         2.524
```

```
  25-Year        3.417
  50-Year        3.900
  100-Year       4.159
  200-Year       4.281
  500-Year       4.438



********** Link: Project POC                              **********    Link Outflow 1 Frequency Stats
 Flood Frequency Data(cfs)
 (Recurrence Interval Computed Using Gringorten Plotting Position)
Tr (yrs)       Flood Peak (cfs)
========================================
  2-Year         1.368
  5-Year         2.177
  10-Year        2.617
  25-Year        3.553
  50-Year        4.021
  100-Year       4.314
  200-Year       4.411
  500-Year       4.535



 ***********Groundwater Recharge Summary *************
Recharge is computed as input to Perlnd Groundwater Plus Infiltration in Structures

          Total Predeveloped Recharge During Simulation
Model Element                    Recharge Amount (ac-ft)
-----------------------------------------------------------------------------------------------
Subbasin: Project Site             1004.954

Total:                             1004.954

          Total Post Developed Recharge During Simulation
Model Element                    Recharge Amount (ac-ft)
-----------------------------------------------------------------------------------------------
Subbasin: Tributary Basin          764.259
Subbasin: Bypass Basin - PG        0.000
Subbasin: Bypass Basin - Non P0.000
Link:     Bioretention Facilit     0.000
Link:     Runoff Treatment POC     0.000
Link:     Project POC              0.000

Total:                             764.259

Total Predevelopment Recharge is Greater than Post Developed
Average Recharge Per Year, (Number of Years= 158)
Predeveloped:   6.360 ac-ft/year,  Post Developed:   4.837 ac-ft/year

 ***********Water Quality Facility Data *************

---------------------SCENARIO: PREDEVELOPED

Number of Links:  0


---------------------SCENARIO: POSTDEVELOPED

Number of Links:  3


********** Link: Bioretention Facility                    **********

 Infiltration/Filtration Statistics--------------------
 Inflow Volume (ac-ft):  2707.66
 Inflow Volume Including PPT-Evap (ac-ft):  2746.67
 Total Runoff Infiltrated (ac-ft):  0.00,  0.00%
 Total Runoff Filtered (ac-ft):  2629.52,  95.73%
 Primary Outflow To Downstream System (ac-ft):  2746.22
 Secondary Outflow To Downstream System (ac-ft):  0.00
```

VOLUME TREATED BY
BIORETENTION FACILITY

RUNOFF TREATMENT CALCS

```
 Percent Treated (Infiltrated+Filtered)/Total Volume: 95.73%

********** Link: Runoff Treatment POC                              **********

 Infiltration/Filtration Statistics--------------------
 Inflow Volume (ac-ft):  2824.25
 Inflow Volume Including PPT-Evap (ac-ft):  2824.25
 Total Runoff Infiltrated (ac-ft):  0.00,  0.00%
 Total Runoff Filtered (ac-ft):  0.00,  0.00%
 Primary Outflow To Downstream System (ac-ft):  2824.25
 Secondary Outflow To Downstream System (ac-ft):  0.00
 Percent Treated (Infiltrated+Filtered)/Total Volume: 0.00%
```

TOTAL VOLUME PRODUCED BY POLLUTION GENERATING SURFACES

```
********** Link: Project POC                              **********

 Infiltration/Filtration Statistics--------------------
 Inflow Volume (ac-ft):  2930.71
 Inflow Volume Including PPT-Evap (ac-ft):  2930.71
 Total Runoff Infiltrated (ac-ft):  0.00,  0.00%
 Total Runoff Filtered (ac-ft):  0.00,  0.00%
 Primary Outflow To Downstream System (ac-ft):  2930.71
 Secondary Outflow To Downstream System (ac-ft):  0.00
 Percent Treated (Infiltrated+Filtered)/Total Volume: 0.00%


 ************Compliance Point Results *************

Scenario Predeveloped Compliance Subbasin: Project Site

Scenario Postdeveloped Compliance Link: Project POC

    *** Point of Compliance Flow Frequency Data ***
    Recurrence Interval Computed Using Gringorten Plotting Position

        Predevelopment Runoff                   Postdevelopment Runoff
Tr (Years)       Discharge (cfs)          Tr (Years)       Discharge (cfs)
------------------------------------------------------------------------------------------
  2-Year            1.331          2-Year            1.368
  5-Year            2.098          5-Year            2.177
  10-Year           2.632          10-Year           2.617
  25-Year           3.482          25-Year           3.553
  50-Year           3.828          50-Year           4.021
  100-Year          5.149          100-Year          4.314
  200-Year          5.298          200-Year          4.411
  500-Year          5.456          500-Year          4.535
 ** Record too Short to Compute Peak Discharge for These Recurrence Intervals


**** Flow Duration Performance ****
Excursion at Predeveloped 50%Q2 (Must be Less Than or Equal to 0%):          170.8%   FAIL
Maximum Excursion from 50%Q2 to Q2 (Must be Less Than or Equal to 0%):       170.8%   FAIL
Maximum Excursion from Q2 to Q50 (Must be less than 10%):                  99999.0%   FAIL
Percent Excursion from Q2 to Q50 (Must be less than 50%):                     98.9%   FAIL

-------------------------------------------------------------------------
FLOW DURATION DESIGN CRITERIA:   FAIL
-------------------------------------------------------------------------


**** LID Duration Performance ****
Excursion at Predeveloped 8%Q2 (Must be Less Than 0%):                21.0%        FAIL
Maximum Excursion from 8%Q2 to 50%Q2 (Must be Less Than 0%):         184.5%        FAIL

-------------------------------------------------------------------------
LID DURATION DESIGN CRITERIA:   FAIL
-----------------------------------
```

COMPLIANCE CALCULATION

(VOLUME TREATED BY BIORETENTION)/(TOTAL WATER QUALITY VOLUME) = % TREATED

(2629.52 AC-FT)/(2824.25 AC-FT)= **93.1%**

Appendix F

Flow Control Calculations

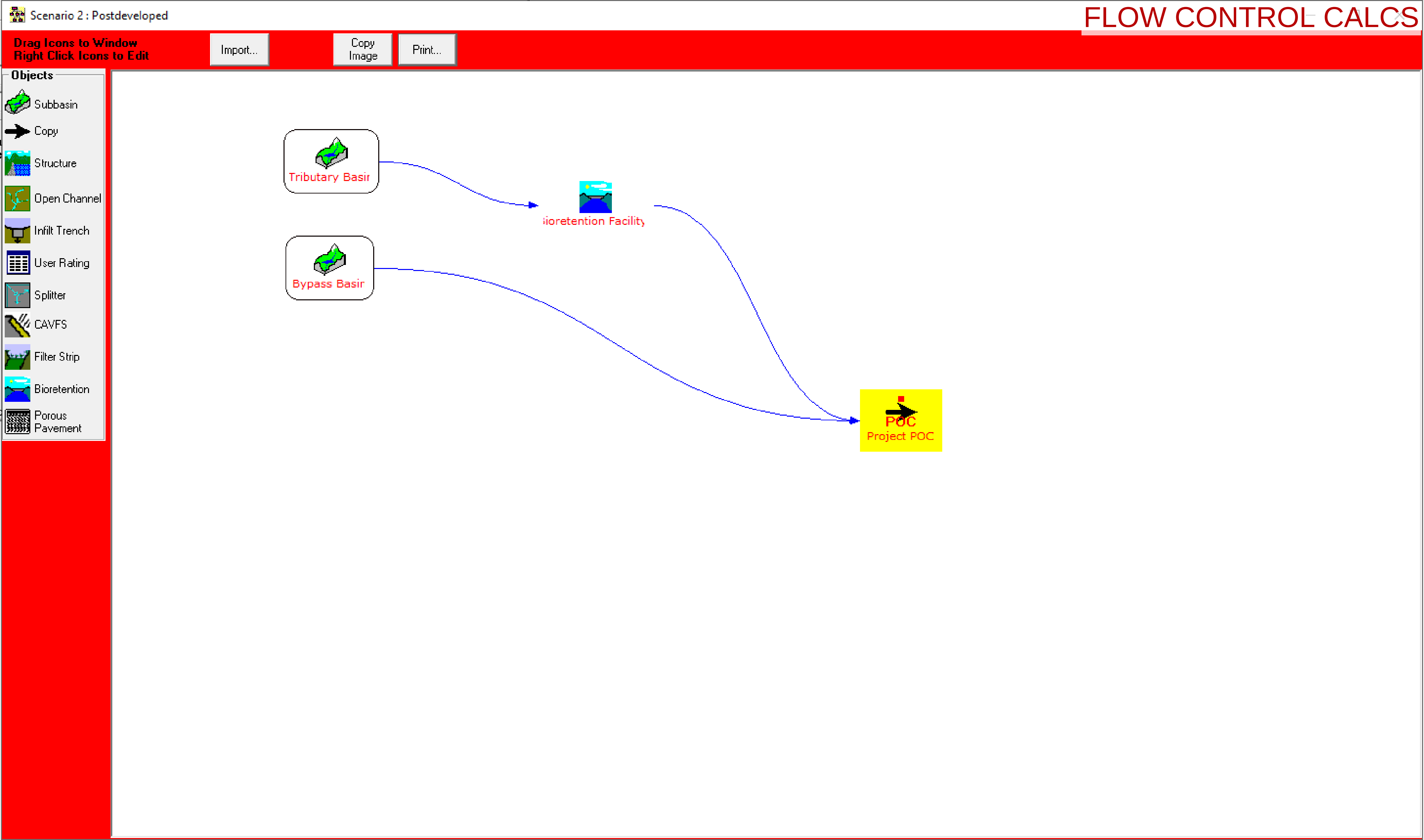
Scenario 2 : Postdeveloped
Drag Icons to Window
Right Click Icons to Edit
Import...
Copy Image
Print...
Objects
Subbasin
Copy
Structure
Open Channel
Infilt Trench
User Rating
Splitter
CAVFS
Filter Strip
Bioretention
Porous Pavement
Tributary Basir
Bypass Basir
ioretention Facility
POC
Project POC

MGS FLOOD
PROJECT REPORT

Program Version: MGSFlood 4.52
Program License Number: 200410007
Project Simulation Performed on: 02/25/2021 2:05 PM
Report Generation Date: 02/25/2021 2:05 PM

Input File Name:	GHSModeling_20200504.fld
Project Name:	GHS Rec Building
Analysis Title:	90% CD Model
Comments:	.

PRECIPITATION INPUT

Computational Time Step (Minutes): 15

Extended Precipitation Time Series Selected
Climatic Region Number: 5

Full Period of Record Available used for Routing
Precipitation Station : 95004805 Puget West 48 in_5min 10/01/1939-10/01/2097
Evaporation Station : 951048 Puget West 48 in MAP
Evaporation Scale Factor : 0.750

HSPF Parameter Region Number: 1
HSPF Parameter Region Name : USGS Default

********** Default HSPF Parameters Used (Not Modified by User) ***************

********************** WATERSHED DEFINITION ***********************

Predevelopment/Post Development Tributary Area Summary

	Predeveloped	Post Developed
Total Subbasin Area (acres)	7.887	7.813
Area of Links that Include Precip/Evap (acres)	0.000	0.074
Total (acres)	7.887	7.887

---------------------SCENARIO: PREDEVELOPED

Number of Subbasins: 1

---------- Subbasin : Project Site ----------

	-------Area (Acres) --------
Till Grass	7.535
Impervious	0.353
Subbasin Total	7.887

```
---------------------SCENARIO: POSTDEVELOPED
Number of Subbasins:   2


 ---------- Subbasin : Tributary Basin ----------
                       -------Area (Acres) --------
Till Grass                  5.730
Impervious                  1.753
----------------------------------------------
Subbasin Total              7.483


 ---------- Subbasin : Bypass Basin ----------
                       -------Area (Acres) --------
Impervious                  0.331
----------------------------------------------
Subbasin Total              0.331



************************* LINK DATA *******************************

----------------------SCENARIO: PREDEVELOPED
Number of Links:   0


************************* LINK DATA *******************************

----------------------SCENARIO: POSTDEVELOPED
Number of Links:   2


------------------------------------------
Link Name: Bioretention Facility
Link Type:   Bioretention Facility
Downstream Link Name: Project POC

Base Elevation (ft)                :      184.83
Riser Crest Elevation (ft)                  :      185.83
Storage Depth (ft)                 :     1.00
Bottom Length (ft)                 :      322.3
Bottom Width (ft)                  :      10.0
Side Slopes (ft/ft)                : L1= 3.00    L2= 3.00   W1= 3.00   W2= 3.00
Bottom Area (sq-ft)                :      3223.
Area at Riser Crest El (sq-ft)     :      5,253.
                        (acres)    :       0.121
Volume at Riser Crest (cu-ft)      :      5,199.
                        (ac-ft)    :      0.119

Infiltration on Bottom and Sideslopes Selected

Soil Properties
Biosoil Thickness (ft)                               :        1.50
Biosoil Saturated Hydraulic Conductivity (in/hr)     :        3.00
Biosoil Porosity (Percent)                           :        20.00
```

BIORETENTION BOTTOM AREA IS 10% LESS THAN DESIGN AREA TO ACCOUNT FOR CONSTRUCTION TOLERANCE ALLOWABLE BY PROJECT SPECS

12 IN/HR DEFAULT DOE SOIL MIX WITH 4.0 FACTOR OF SAFETY DUE TO > 10,000 SF TRIBUTARY IMPERVIOUS SURFACE

```
Maximum Elevation of Bioretention Soil  : 186.33
Native Soil Hydraulic Conductivity (in/hr)          :         0.00

Underdrain Present
Orifice NOT Present in Under Drain

Riser Geometry
Riser Structure Type                 : Circular
Riser Diameter (in)                  : 24.00
Common Length (ft)                   : 2.000
Riser Crest Elevation                : 185.83 ft

 Hydraulic Structure Geometry

Number of Devices:      1

      --- Device Number     1 ---
Device Type               :   Trapezoidal Broad Crested Weir (Independent of Riser)
Invert Elevation (ft)     :    185.25
Length (ft)               :      2.50
Side Slope (Z) (ft/ft)    :      1.00


-------------------------------------------
Link Name: Project POC
Link Type:   Copy
Downstream Link: None


**********************FLOOD FREQUENCY AND DURATION STATISTICS*******************

---------------------SCENARIO: PREDEVELOPED
Number of Subbasins:   1
Number of Links:   0


---------------------SCENARIO: POSTDEVELOPED
Number of Subbasins:   2
Number of Links:   2

********** Subbasin: Tributary Basin **********

 Flood Frequency Data(cfs)
 (Recurrence Interval Computed Using Gringorten Plotting Position)
Tr (yrs)          Flood Peak (cfs)
========================================
   2-Year         1.629
   5-Year         2.384
   10-Year        2.890
   25-Year        3.763
   50-Year        4.145
   100-Year       5.267
   200-Year       5.461
   500-Year       5.684
```

```
********** Subbasin: Bypass Basin **********

 Flood Frequency Data(cfs)
 (Recurrence Interval Computed Using Gringorten Plotting Position)
Tr (yrs)          Flood Peak (cfs)
========================================
   2-Year         0.146
   5-Year         0.183
   10-Year        0.215
   25-Year        0.259
   50-Year        0.296
   100-Year       0.349
   200-Year       0.355
   500-Year       0.362
```

```
********** Link: Bioretention Facility                                  **********     Link Inflow
Frequency Stats
 Flood Frequency Data(cfs)
 (Recurrence Interval Computed Using Gringorten Plotting Position)
Tr (yrs)          Flood Peak (cfs)
========================================
   2-Year         1.629
   5-Year         2.384
   10-Year        2.890
   25-Year        3.763
   50-Year        4.145
   100-Year       5.267
   200-Year       5.461
   500-Year       5.684
```

```
********** Link: Bioretention Facility                                  **********     Link Outflow 1
Frequency Stats
 Flood Frequency Data(cfs)
 (Recurrence Interval Computed Using Gringorten Plotting Position)
Tr (yrs)          Flood Peak (cfs)
========================================
   2-Year         1.226
   5-Year         2.025
   10-Year        2.442
   25-Year        3.300
   50-Year        3.670
   100-Year       3.886
   200-Year       3.909
   500-Year       3.937
```

```
********** Link: Bioretention Facility                                  **********     Link WSEL Stats
 WSEL Frequency Data(ft)
 (Recurrence Interval Computed Using Gringorten Plotting Position)
Tr (yrs)          WSEL Peak (ft)
========================================
```

```
    1.05-Year     185.324
    1.11-Year     185.346
    1.25-Year     185.401
    2.00-Year     185.492
    3.33-Year     185.554
       5-Year     185.610
      10-Year     185.665
      25-Year     185.762
      50-Year     185.799
    100-Year      185.821
```

OVERFLOW ELEVATION=185.83

```
********** Link: Project POC                                    **********     Link Outflow 1
Frequency Stats
 Flood Frequency Data(cfs)
 (Recurrence Interval Computed Using Gringorten Plotting Position)
Tr (yrs)          Flood Peak (cfs)
========================================
    2-Year        1.329
    5-Year        2.162
    10-Year       2.604
    25-Year       3.538
    50-Year       3.915
    100-Year      4.109
    200-Year      4.119
    500-Year      4.128
```

```
 ***********Groundwater Recharge Summary *************
Recharge is computed as input to Perlnd Groundwater Plus Infiltration in Structures

                    Total Predeveloped Recharge During Simulation
Model Element                                    Recharge Amount (ac-ft)
-----------------------------------------------------------------------------------------
Subbasin: Project Site               1004.941
____________________________________________
Total:                                           1004.941

                  Total Post Developed Recharge During Simulation
Model Element                                    Recharge Amount (ac-ft)
-----------------------------------------------------------------------------------------
Subbasin: Tributary Basin            764.219
Subbasin: Bypass Basin               0.000
Link:        Bioretention Facilit    0.000
Link:        Project POC             0.000
____________________________________________
Total:                                                     764.219
```

Total Predevelopment Recharge is Greater than Post Developed
Average Recharge Per Year, (Number of Years= 158)
Predeveloped: 6.360 ac-ft/year,   Post Developed: 4.837 ac-ft/year

 ***********Water Quality Facility Data *************

FLOW CONTROL CALCS

```
---------------------SCENARIO: PREDEVELOPED

Number of Links:   0


---------------------SCENARIO: POSTDEVELOPED

Number of Links:   2


********** Link: Bioretention Facility                                     **********

 Infiltration/Filtration Statistics--------------------
 Inflow Volume (ac-ft):   2707.85
 Inflow Volume Including PPT-Evap (ac-ft):   2746.87
 Total Runoff Infiltrated (ac-ft):   0.00,   0.00%
 Total Runoff Filtered (ac-ft):   2629.28,   95.72%
 Primary Outflow To Downstream System (ac-ft):   2746.87
 Secondary Outflow To Downstream System (ac-ft):   0.00
 Percent Treated (Infiltrated+Filtered)/Total Volume: 95.72%

********** Link: Project POC                                                  **********

 Infiltration/Filtration Statistics--------------------
 Inflow Volume (ac-ft):   2931.21
 Inflow Volume Including PPT-Evap (ac-ft):   2931.21
 Total Runoff Infiltrated (ac-ft):   0.00,   0.00%
 Total Runoff Filtered (ac-ft):   0.00,   0.00%
 Primary Outflow To Downstream System (ac-ft):   2931.21
 Secondary Outflow To Downstream System (ac-ft):   0.00
 Percent Treated (Infiltrated+Filtered)/Total Volume: 0.00%


 ************Compliance Point Results *************

Scenario Predeveloped Compliance Subbasin: Project Site

Scenario Postdeveloped Compliance Link: Project POC

       *** Point of Compliance Flow Frequency Data ***
      Recurrence Interval Computed Using Gringorten Plotting Position

        Predevelopment Runoff                    Postdevelopment Runoff
Tr (Years)        Discharge (cfs)          Tr (Years)       Discharge (cfs)
------------------------------------------------------------------------------------------------
   2-Year                    1.331              2-Year                 1.329
   5-Year                    2.098              5-Year                 2.162
   10-Year                   2.632              10-Year                2.604
   25-Year                   3.482              25-Year                3.538
   50-Year                   3.828              50-Year                3.915
   100-Year                  5.149              100-Year               4.109
   200-Year                  5.298              200-Year               4.119
   500-Year                  5.456              500-Year               4.128
 ** Record too Short to Compute Peak Discharge for These Recurrence Intervals
```

100-YEAR PEAK FLOW IN POST-DEVELOPED CONDITION DOES NOT EXCEED THE 100-YEAR PEAK FLOW IN THE PRE-DEVELOPED CONDITION

```
**** Flow Duration Performance ****
Excursion at Predeveloped 50%Q2 (Must be Less Than or Equal to 0%):          169.9%    FAIL
Maximum Excursion from 50%Q2 to Q2 (Must be Less Than or Equal to 0%):       169.9%    FAIL
Maximum Excursion from Q2 to Q50 (Must be less than 10%):                  99999.0%    FAIL
Percent Excursion from Q2 to Q50 (Must be less than 50%):                     98.9%    FAIL

------------------------------------------------------------------------------------------------
FLOW DURATION DESIGN CRITERIA:     FAIL
------------------------------------------------------------------------------------------------


**** LID Duration Performance ****
Excursion at Predeveloped 8%Q2 (Must be Less Than 0%):                  20.9%      FAIL
Maximum Excursion from 8%Q2 to 50%Q2 (Must be Less Than 0%):           184.5%      FAIL

------------------------------------------------------------------------------------------------
LID DURATION DESIGN CRITERIA:     FAIL
------------------------------------------------------------------------------------------------
```

Appendix G

National Wetland Index Map

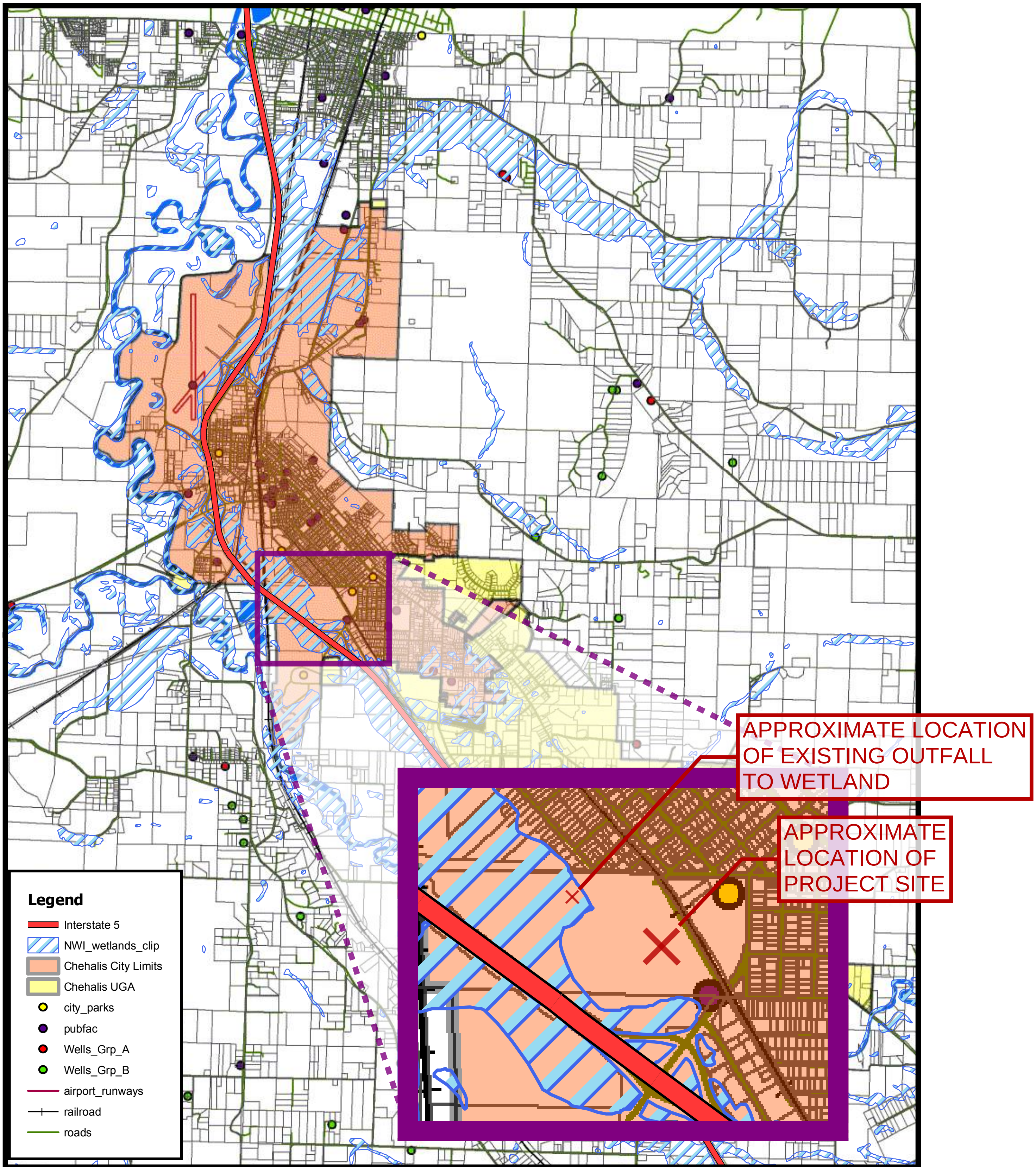

APPROXIMATE LOCATION OF EXISTING OUTFALL TO WETLAND

APPROXIMATE LOCATION OF PROJECT SITE

1 inch = 1.03 miles

City of Chehalis
National Wetland Index Map

Created: October 27,2009
LaJane Schopfer

Appendix H

Operations & Maintenance Standards

OPERATIONS AND MAINTENANCE GUIDELINES FOR CSWPPP BMPS

You are here: [2019 SWMMWW](#) > [Volume II - Construction Stormwater Pollution Prevention](#) > [II-3 Construction Stormwater BMPs](#) > BMP C105: Stabilized Construction Access

---

BMP C105: Stabilized Construction Access

Purpose

Stabilized construction accesses are established to reduce the amount of sediment transported onto paved roads outside the project site by vehicles or equipment. This is done by constructing a stabilized pad of quarry spalls at entrances and exits for project sites.

Conditions of Use

Construction accesses shall be stabilized wherever traffic will be entering or leaving a construction site if paved roads or other paved areas are within 1,000 feet of the site.

For residential subdivision construction sites, provide a stabilized construction access for each residence, rather than only at the main subdivision entrance. Stabilized surfaces shall be of sufficient length/width to provide vehicle access/parking, based on lot size and configuration.

On large commercial, highway, and road projects, the designer should include enough extra materials in the contract to allow for additional stabilized accesses not shown in the initial Construction SWPPP. It is difficult to determine exactly where access to these projects will take place; additional materials will enable the contractor to install them where needed.

Design and Installation Specifications

See Figure II-3.1: Stabilized Construction Access for details. Note: the 100’ minimum length of the access shall be reduced to the maximum practicable size when the size or configuration of the site does not allow the full length (100’).

Construct stabilized construction accesses with a 12-inch thick pad of 4-inch to 8-inch quarry spalls, a 4-inch course of asphalt treated base (ATB), or use existing pavement. Do not use crushed concrete, cement, or calcium chloride for construction access stabilization because these products raise pH levels in stormwater and concrete discharge to waters of the State is prohibited.

A separation geotextile shall be placed under the spalls to prevent fine sediment from pumping up into the rock pad. The geotextile shall meet the standards listed in Table II-3.2: Stabilized Construction Access Geotextile Standards.

Table II-3.2: Stabilized Construction Access Geotextile Standards

Geotextile Property	Required Value

Geotextile Property	Required Value
Grab Tensile Strength (ASTM D4751)	200 psi min.
Grab Tensile Elongation (ASTM D4632)	30% max.
Mullen Burst Strength (ASTM D3786-80a)	400 psi min.
AOS (ASTM D4751)	20-45 (U.S. standard sieve size)

- Consider early installation of the first lift of asphalt in areas that will be paved; this can be used as a stabilized access. Also consider the installation of excess concrete as a stabilized access. During large concrete pours, excess concrete is often available for this purpose.
- Fencing (see BMP C103: High-Visibility Fence) shall be installed as necessary to restrict traffic to the construction access.
- Whenever possible, the access shall be constructed on a firm, compacted subgrade. This can substantially increase the effectiveness of the pad and reduce the need for maintenance.
- Construction accesses should avoid crossing existing sidewalks and back of walk drains if at all possible. If a construction access must cross a sidewalk or back of walk drain, the full length of the sidewalk and back of walk drain must be covered and protected from sediment leaving the site.

Alternative Material Specification

WSDOT has raised safety concerns about the Quarry Spall rock specified above. WSDOT observes that the 4-inch to 8-inch rock sizes can become trapped between Dually truck tires, and then released off-site at highway speeds. WSDOT has chosen to use a modified specification for the rock while continuously verifying that the Stabilized Construction Access remains effective. To remain effective, the BMP must prevent sediment from migrating off site. To date, there has been no performance testing to verify operation of this new specification. Jurisdictions may use the alternative specification, but must perform increased off-site inspection if they use, or allow others to use, it.

Stabilized Construction Accesses may use material that meets the requirements of WSDOT's *Standard Specifications for Road, Bridge, and Municipal Construction* Section 9-03.9(1) (WSDOT, 2016) for ballast except for the following special requirements.

The grading and quality requirements are listed in Table II-3.3: Stabilized Construction Access Alternative Material Requirements.

Table II-3.3: Stabilized Construction Access Alternative Material Requirements

Sieve Size	Percent Passing

Sieve Size	Percent Passing
2½″	99-100
2″	65-100
¾″	40-80
No. 4	5 max.
No. 100	0-2
% Fracture	75 min.

- All percentages are by weight.
- The sand equivalent value and dust ratio requirements do not apply.
- The fracture requirement shall be at least one fractured face and will apply the combined aggregate retained on the No. 4 sieve in accordance with FOP for AASHTO T 335.

Maintenance Standards

Quarry spalls shall be added if the pad is no longer in accordance with the specifications.

- If the access is not preventing sediment from being tracked onto pavement, then alternative measures to keep the streets free of sediment shall be used. This may include replacement/cleaning of the existing quarry spalls, street sweeping, an increase in the dimensions of the access, or the installation of BMP C106: Wheel Wash.
- Any sediment that is tracked onto pavement shall be removed by shoveling or street sweeping. The sediment collected by sweeping shall be removed or stabilized on site. The pavement shall not be cleaned by washing down the street, except when high efficiency sweeping is ineffective and there is a threat to public safety. If it is necessary to wash the streets, the construction of a small sump to contain the wash water shall be considered. The sediment would then be washed into the sump where it can be controlled.
- Perform street sweeping by hand or with a high efficiency sweeper. Do not use a non-high efficiency mechanical sweeper because this creates dust and throws soils into storm systems or conveyance ditches.
- Any quarry spalls that are loosened from the pad, which end up on the roadway shall be removed immediately.
- If vehicles are entering or exiting the site at points other than the construction access(es), BMP C103: High-Visibility Fence shall be installed to control traffic.
- Upon project completion and site stabilization, all construction accesses intended as permanent access for maintenance shall be permanently stabilized.

Figure II-3.1: Stabilized Construction Access

Figure II-3.1: Stabilized Construction Access

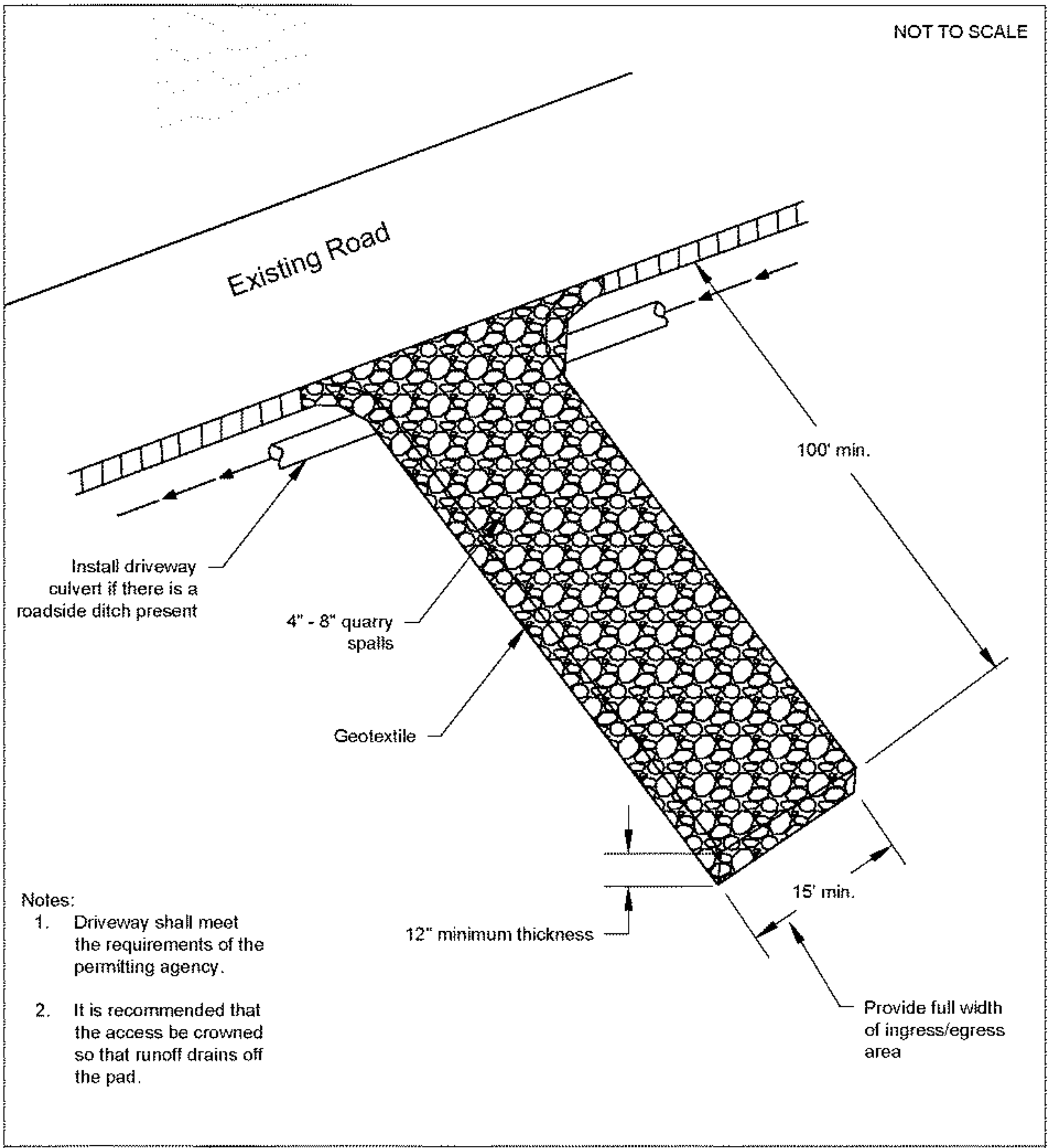

Notes:

1. Driveway shall meet the requirements of the permitting agency.
2. It is recommended that the access be crowned so that runoff drains off the pad.

DEPARTMENT OF ECOLOGY
State of Washington

Stabilized Construction Access

Revised June 2018

Approved as Functionally Equivalent

Ecology has approved products as able to meet the requirements of this BMP. The products did not pass through the Technology Assessment Protocol – Ecology (TAPE) process. Local jurisdictions may choose not to accept these products, or may require additional testing prior to consideration for local use. Products that Ecology has approved as functionally equivalent are available for review on Ecology's website at:

https://ecology.wa.gov/Regulations-Permits/Guidance-technical-assistance/Stormwater-permittee-guidance-resources/Emerging-stormwater-treatment-technologies

You are here: 2019 SWMMWW > Volume II - Construction Stormwater Pollution Prevention > II-3 Construction Stormwater BMPs > BMP C200: Interceptor Dike and Swale

---

BMP C200: Interceptor Dike and Swale

Purpose

Provide a dike of compacted soil or a swale at the top or base of a disturbed slope or along the perimeter of a disturbed construction area to convey stormwater. Use the dike and/or swale to intercept the runoff from unprotected areas and direct it to areas where erosion can be controlled. This can prevent storm runoff from entering the work area or sediment-laden runoff from leaving the construction site.

Conditions of Use

Use an interceptor dike or swale where runoff from an exposed site or disturbed slope must be conveyed to an erosion control BMP which can safely convey the stormwater.

- Locate upslope of a construction site to prevent runoff from entering the disturbed area.
- When placed horizontally across a disturbed slope, it reduces the amount and velocity of runoff flowing down the slope.
- Locate downslope to collect runoff from a disturbed area and direct it to a sediment BMP (e.g. BMP C240: Sediment Trap or BMP C241: Sediment Pond (Temporary)).

Design and Installation Specifications

- Dike and/or swale and channel must be stabilized with temporary or permanent vegetation or other channel protection during construction.
- Steep grades require channel protection and check dams.
- Review construction for areas where overtopping may occur.
- Can be used at the top of new fill before vegetation is established.
- May be used as a permanent diversion channel to carry the runoff.
- Contributing area for an individual dike or swale should be one acre or less.
- Design the dike and/or swale to contain flows calculated by one of the following methods:
    - Single Event Hydrograph Method: The peak volumetric flow rate calculated using a 10-minute time step from a Type 1A, 10-year, 24-hour frequency storm for the worst-case land cover condition.

      OR

  - Continuous Simulation Method: The 10-year peak flow rate, as determined by an approved continuous runoff model with a 15-minute time step for the worst-case land cover condition.

Worst-case land cover conditions (i.e., producing the most runoff) should be used for analysis (in most cases, this would be the land cover conditions just prior to final landscaping).

Interceptor Dikes

Interceptor dikes shall meet the following criteria:

- Top Width: 2 feet minimum.
- Height: 1.5 feet minimum on berm.
- Side Slope: 2H:1V or flatter.
- Grade: Depends on topography, however, dike system minimum is 0.5%, and maximum is 1%.
- Compaction: Minimum of 90 percent ASTM D698 standard proctor.
- Stabilization: Depends on velocity and reach. Inspect regularly to ensure stability.
- Ground Slopes <5%: Seed and mulch applied within 5 days of dike construction (see BMP C121: Mulching).
- Ground Slopes 5 - 40%: Dependent on runoff velocities and dike materials. Stabilization should be done immediately using either sod or riprap, or other measures to avoid erosion.
- The upslope side of the dike shall provide positive drainage to the dike outlet. No erosion shall occur at the outlet. Provide energy dissipation measures as necessary. Sediment-laden runoff must be released through a sediment trapping facility.
- Minimize construction traffic over temporary dikes. Use temporary cross culverts for channel crossing.
- See Table II-3.8: Horizontal Spacing of Interceptor Dikes Along Ground Slope for recommended horizontal spacing between dikes.

Table II-3.8: Horizontal Spacing of Interceptor Dikes Along Ground Slope

Average Slope	Slope Percent	Flowpath Length
20H:1V or less	3-5%	300 feet
(10 to 20)H:1V	5-10%	200 feet
(4 to 10)H:1V	10-25%	100 feet
(2 to 4)H:1V	25-50%	50 feet

Interceptor Swales

Interceptor swales shall meet the following criteria:

- Bottom Width: 2 feet minimum; the cross-section bottom shall be level.
- Depth: 1-foot minimum.
- Side Slope: 2H:1V or flatter.
- Grade: Maximum 5 percent, with positive drainage to a suitable outlet (such as BMP C241: Sediment Pond (Temporary)).
- Stabilization: Seed as per BMP C120: Temporary and Permanent Seeding, or BMP C202: Riprap Channel Lining, 12 inches thick riprap pressed into the bank and extending at least 8 inches vertical from the bottom.

Maintenance Standards

- Inspect diversion dikes and interceptor swales once a week and after every rainfall. Immediately remove sediment from the flow area.
- Damage caused by construction traffic or other activity must be repaired before the end of each working day.
- Check outlets and make timely repairs as needed to avoid gully formation. When the area below the temporary diversion dike is permanently stabilized, remove the dike and fill and stabilize the channel to blend with the natural surface.

You are here: 2019 SWMMWW > Volume II - Construction Stormwater Pollution Prevention > II-3 Construction Stormwater BMPs > BMP C207: Check Dams

BMP C207: Check Dams

Purpose

Construction of check dams across a swale or ditch reduces the velocity of concentrated flow and dissipates energy at the check dam.

Conditions of Use

Use check dams where temporary or permanent channels are not yet vegetated, channel lining is infeasible, and/or velocity checks are required.

- Check dams may not be placed in streams unless approved by the State Department of Fish and Wildlife.
- Check dams may not be placed in wetlands without approval from a permitting agency.
- Do not place check dams below the expected backwater from any salmonid bearing water between October 1 and May 31 to ensure that there is no loss of high flow refuge habitat for overwintering juvenile salmonids and emergent salmonid fry.

Design and Installation Specifications

- Construct rock check dams from appropriately sized rock. The rock used must be large enough to stay in place given the expected design flow through the channel. The rock must be placed by hand or by mechanical means (do not dump the rock to form the dam) to achieve complete coverage of the ditch or swale and to ensure that the center of the dam is lower than the edges.
- Check dams may also be constructed of either rock or pea-gravel filled bags. Numerous new products are also available for this purpose. They tend to be re-usable, quick and easy to install, effective, and cost efficient.
- Place check dams perpendicular to the flow of water.
- The check dam should form a triangle when viewed from the side. This prevents undercutting as water flows over the face of the check dam rather than falling directly onto the ditch bottom.
- Before installing check dams, impound and bypass upstream water flow away from the work area. Options for bypassing include pumps, siphons, or temporary channels.
- Check dams combined with sumps work more effectively at slowing flow and retaining sediment than a check dam alone. A deep sump should be provided immediately upstream of the check dam.

- In some cases, if carefully located and designed, check dams can remain as permanent installations with very minor regrading. They may be left as either spillways, in which case accumulated sediment would be graded and seeded, or as check dams to prevent further sediment from leaving the site.
- The maximum spacing between check dams shall be such that the downstream toe of the upstream dam is at the same elevation as the top of the downstream dam.
- Keep the maximum height at 2 feet at the center of the check dam.
- Keep the center of the check dam at least 12 inches lower than the outer edges at natural ground elevation.
- Keep the side slopes of the check dam at 2H:1V or flatter.
- Key the stone into the ditch banks and extend it beyond the abutments a minimum of 18 inches to avoid washouts from overflow around the dam.
- Use filter fabric foundation under a rock or sand bag check dam. If a blanket ditch liner is used, filter fabric is not necessary. A piece of organic or synthetic blanket cut to fit will also work for this purpose.
- In the case of grass-lined ditches and swales, all check dams and accumulated sediment shall be removed when the grass has matured sufficiently to protect the ditch or swale - unless the slope of the swale is greater than 4 percent. The area beneath the check dams shall be seeded and mulched immediately after dam removal.
- Ensure that channel appurtenances, such as culvert entrances below check dams, are not subject to damage or blockage from displaced stones.
- See Figure II-3.16: Rock Check Dam.

Maintenance Standards

Check dams shall be monitored for performance and sediment accumulation during and after each rainfall that produces runoff. Sediment shall be removed when it reaches one half the sump depth.

- Anticipate submergence and deposition above the check dam and erosion from high flows around the edges of the dam.
- If significant erosion occurs between dams, install a protective riprap liner in that portion of the channel. See BMP C202: Riprap Channel Lining.

Approved as Functionally Equivalent

Ecology has approved products as able to meet the requirements of this BMP. The products did not pass through the Technology Assessment Protocol – Ecology (TAPE) process. Local jurisdictions may choose not to accept these products, or may require additional testing prior to consideration for local use. Products that Ecology has approved as functionally equivalent are available for review on Ecology's website at:

https://ecology.wa.gov/Regulations-Permits/Guidance-technical-assistance/Stormwater-permittee-guidance-resources/Emerging-stormwater-treatment-technologies

Figure II-3.16: Rock Check Dam

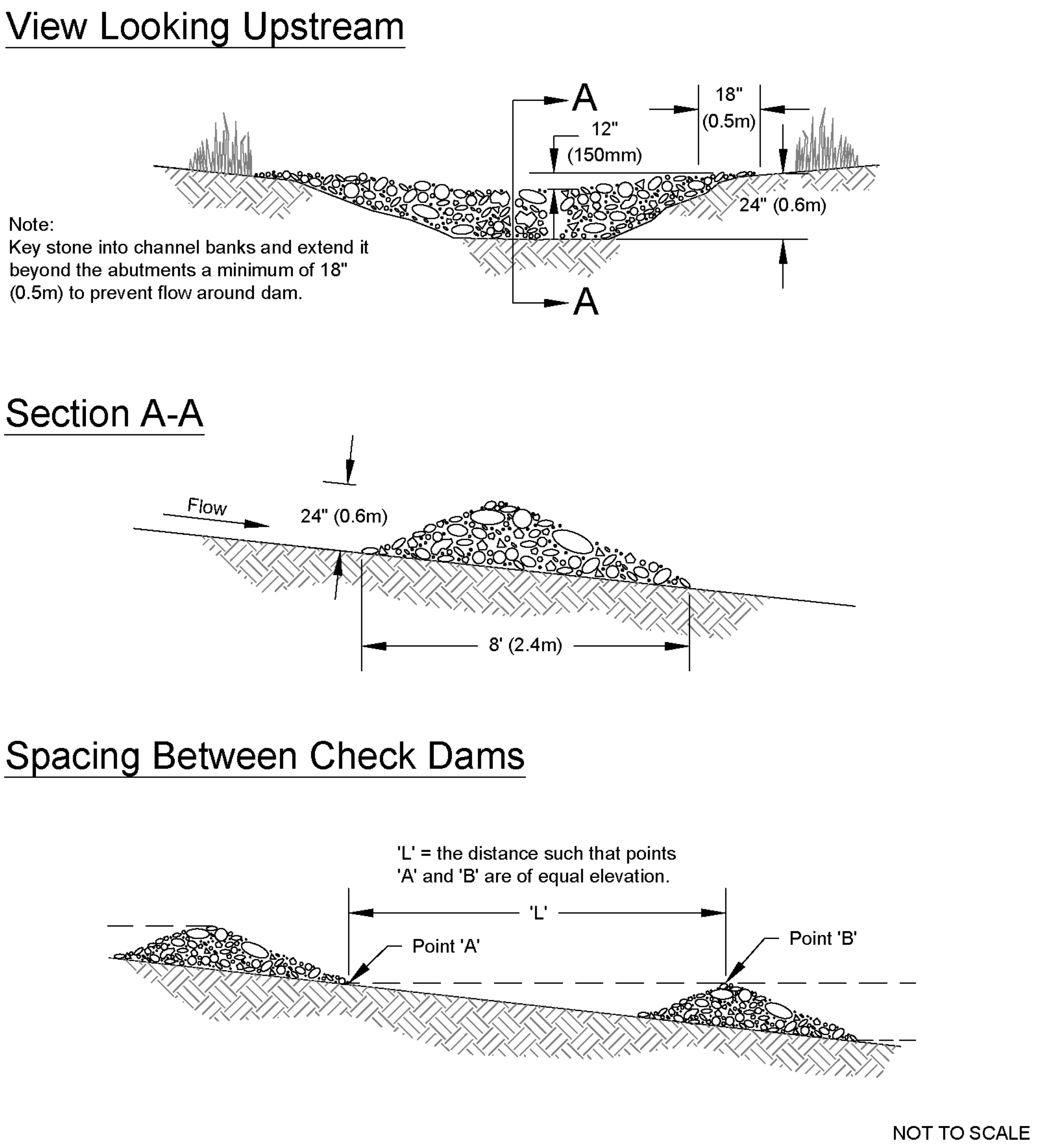

Note:
Key stone into channel banks and extend it beyond the abutments a minimum of 18" (0.5m) to prevent flow around dam.

NOT TO SCALE

DEPARTMENT OF
ECOLOGY
State of Washington

Rock Check Dam

Revised June 2016

You are here: 2019 SWMMWW > Volume II - Construction Stormwater Pollution Prevention > II-3 Construction Stormwater BMPs > BMP C220: Inlet Protection

BMP C220: Inlet Protection

Purpose

Inlet protection prevents coarse sediment from entering drainage systems prior to permanent stabilization of the disturbed area.

Conditions of Use

Use inlet protection at inlets that are operational before permanent stabilization of the disturbed areas that contribute runoff to the inlet. Provide protection for all storm drain inlets downslope and within 500 feet of a disturbed or construction area, unless those inlets are preceded by a sediment trapping BMP.

Also consider inlet protection for lawn and yard drains on new home construction. These small and numerous drains coupled with lack of gutters can add significant amounts of sediment into the roof drain system. If possible, delay installing lawn and yard drains until just before landscaping, or cap these drains to prevent sediment from entering the system until completion of landscaping. Provide 18-inches of sod around each finished lawn and yard drain.

Table II-3.10: Storm Drain Inlet Protection lists several options for inlet protection. All of the methods for inlet protection tend to plug and require a high frequency of maintenance. Limit contributing drainage areas for an individual inlet to one acre or less. If possible, provide emergency overflows with additional end-of-pipe treatment where stormwater ponding would cause a hazard.

Table II-3.10: Storm Drain Inlet Protection

Type of Inlet Protection	Emergency Overflow	Applicable for Paved/ Earthen Surfaces	Conditions of Use
Drop Inlet Protection			
Excavated drop inlet protection	Yes, temporary flooding may occur	Earthen	Applicable for heavy flows. Easy to maintain. Large area requirement: 30'x30'/acre
Block and gravel drop inlet protection	Yes	Paved or Earthen	Applicable for heavy concentrated flows. Will not pond.
Gravel and wire drop inlet protection	No	Paved or Earthen	Applicable for heavy concentrated flows. Will pond. Can withstand traffic.
Catch basin filters	Yes	Paved or Earthen	Frequent maintenance required.
Curb Inlet Protection			
Curb inlet protection with wooden weir	Small capacity overflow	Paved	Used for sturdy, more compact installation.
Block and gravel curb inlet protection	Yes	Paved	Sturdy, but limited filtration.
Culvert Inlet Protection			
Culvert inlet sediment trap	N/A	N/A	18 month expected life.

Design and Installation Specifications

Excavated Drop Inlet Protection

Excavated drop inlet protection consists of an excavated impoundment around the storm drain inlet. Sediment settles out of the stormwater prior to entering the storm drain. Design and installation specifications for excavated drop inlet protection include:

- Provide a depth of 1-2 ft as measured from the crest of the inlet structure.
- Slope sides of excavation should be no steeper than 2H:1V.
- Minimum volume of excavation is 35 cubic yards.
- Shape the excavation to fit the site, with the longest dimension oriented toward the longest inflow area.
- Install provisions for draining to prevent standing water.
- Clear the area of all debris.

- Grade the approach to the inlet uniformly.
- Drill weep holes into the side of the inlet.
- Protect weep holes with screen wire and washed aggregate.
- Seal weep holes when removing structure and stabilizing area.
- Build a temporary dike, if necessary, to the down slope side of the structure to prevent bypass flow.

Block and Gravel Filter

A block and gravel filter is a barrier formed around the inlet with standard concrete blocks and gravel. See Figure II-3.17: Block and Gravel Filter. Design and installation specifications for block gravel filters include:

- Provide a height of 1 to 2 feet above the inlet.
- Recess the first row of blocks 2-inches into the ground for stability.
- Support subsequent courses by placing a pressure treated wood 2x4 through the block opening.
- Do not use mortar.
- Lay some blocks in the bottom row on their side to allow for dewatering the pool.
- Place hardware cloth or comparable wire mesh with ½-inch openings over all block openings.
- Place gravel to just below the top of blocks on slopes of 2H:1V or flatter.
- An alternative design is a gravel berm surrounding the inlet, as follows:
    - Provide a slope of 3H:1V on the upstream side of the berm.
    - Provide a slope of 2H:1V on the downstream side of the berm.
    - Provide a 1-foot wide level stone area between the gravel berm and the inlet.
    - Use stones 3 inches in diameter or larger on the upstream slope of the berm.
    - Use gravel ½- to ¾-inch at a minimum thickness of 1-foot on the downstream slope of the berm.

Figure II-3.17: Block and Gravel Filter

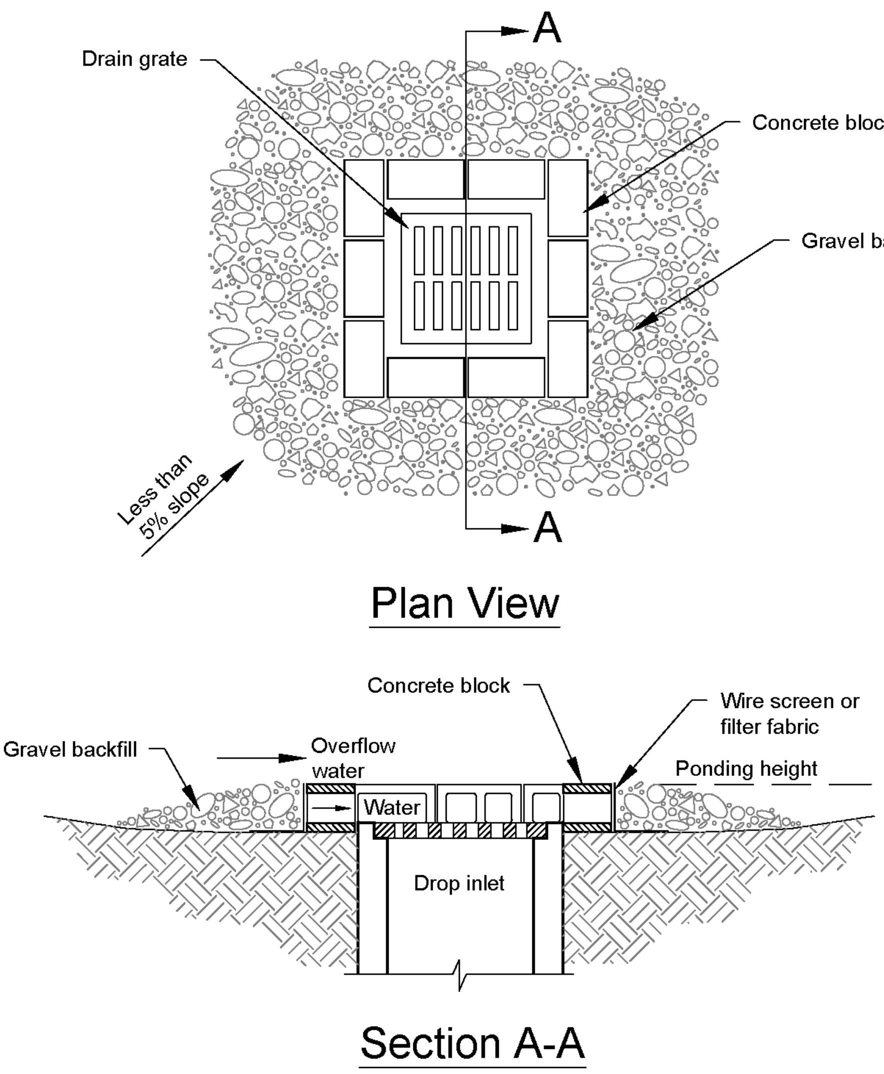

Notes:

1. Drop inlet sediment barriers are to be used for small, nearly level drainage areas. (less than 5%)
2. Excavate a basin of sufficient size adjacent to the drop inlet.
3. The top of the structure (ponding height) must be well below the ground elevation downslope to prevent runoff from bypassing the inlet. A temporary dike may be necessary on the downslope side of the structure.

NOT TO SCALE

DEPARTMENT OF
ECOLOGY
State of Washington

Block and Gravel Filter

Revised June 2016

Gravel and Wire Mesh Filter

Gravel and wire mesh filters are gravel barriers placed over the top of the inlet. This method does not provide an overflow. Design and installation specifications for gravel and wire mesh filters include:

- Use a hardware cloth or comparable wire mesh with ½-inch openings.
    - Place wire mesh over the drop inlet so that the wire extends a minimum of 1-foot beyond each side of the inlet structure.
    - Overlap the strips if more than one strip of mesh is necessary.
- Place coarse aggregate over the wire mesh.
    - Provide at least a 12-inch depth of aggregate over the entire inlet opening and extend at least 18-inches on all sides.

Catch Basin Filters

Catch basin filters are designed by manufacturers for construction sites. The limited sediment storage capacity increases the amount of inspection and maintenance required, which may be daily for heavy sediment loads. To reduce maintenance requirements, combine a catch basin filter with another type of inlet protection. This type of inlet protection provides flow bypass without overflow and therefore may be a better method for inlets located along active rights-of-way. Design and installation specifications for catch basin filters include:

- Provides 5 cubic feet of storage.
- Requires dewatering provisions.
- Provides a high-flow bypass that will not clog under normal use at a construction site.
- Insert the catch basin filter in the catch basin just below the grating.

Curb Inlet Protection with Wooden Weir

Curb inlet protection with wooden weir is an option that consists of a barrier formed around a curb inlet with a wooden frame and gravel. Design and installation specifications for curb inlet protection with wooden weirs include:

- Use wire mesh with ½-inch openings.
- Use extra strength filter cloth.
- Construct a frame.
- Attach the wire and filter fabric to the frame.
- Pile coarse washed aggregate against the wire and fabric.
- Place weight on the frame anchors.

Block and Gravel Curb Inlet Protection

Block and gravel curb inlet protection is a barrier formed around a curb inlet with concrete blocks and gravel. See Figure II-3.18: Block and Gravel Curb Inlet Protection. Design and installation specifications for block and gravel curb inlet protection include:

- Use wire mesh with ½-inch openings.
- Place two concrete blocks on their sides abutting the curb at either side of the inlet opening. These are spacer blocks.
- Place a 2x4 stud through the outer holes of each spacer block to align the front blocks.
- Place blocks on their sides across the front of the inlet and abutting the spacer blocks.
- Place wire mesh over the outside vertical face.
- Pile coarse aggregate against the wire to the top of the barrier.

Figure II-3.18: Block and Gravel Curb Inlet Protection

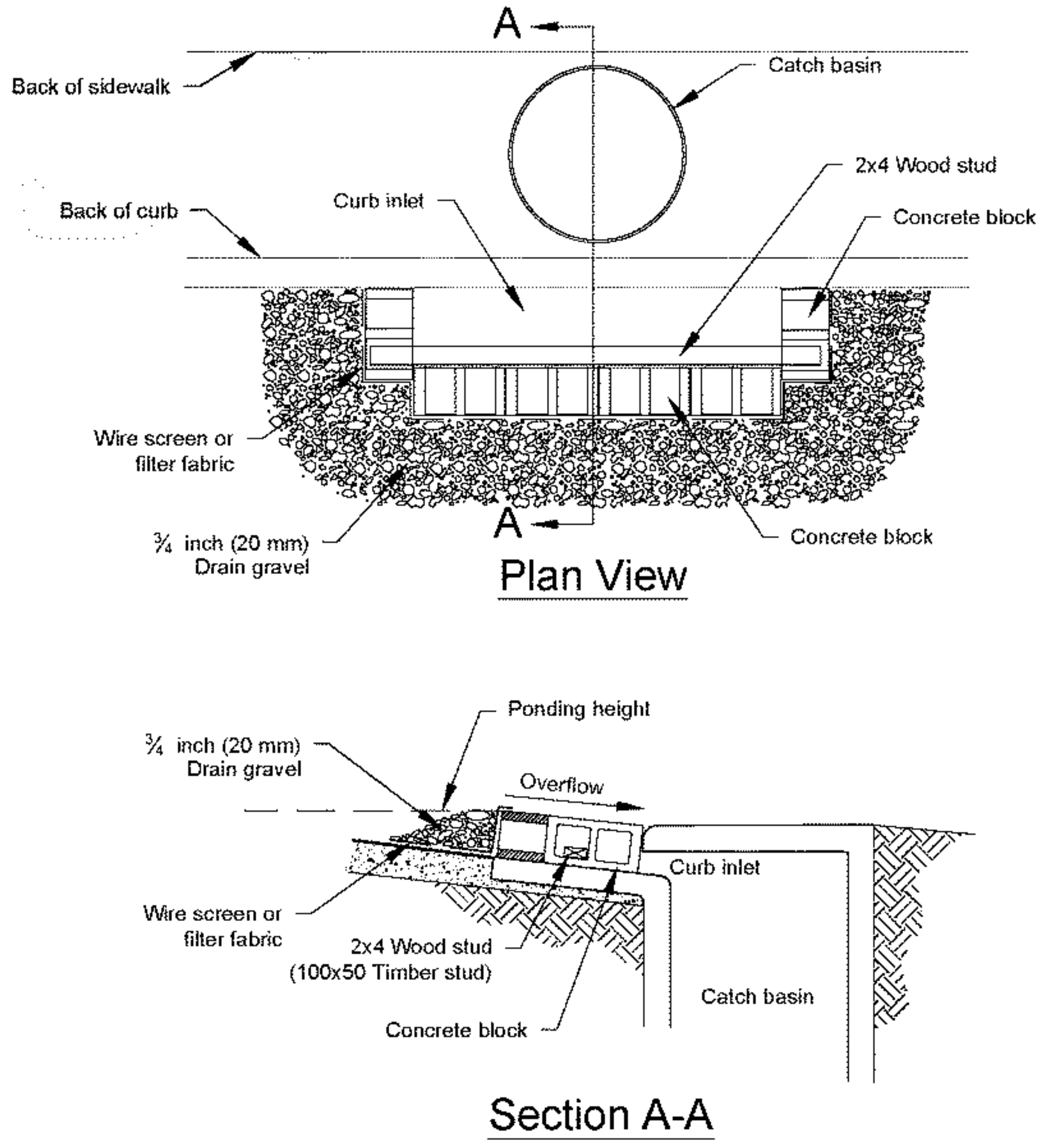

Notes:

1. Use block and gravel type sediment barrier when curb inlet is located in gently sloping street segment, where water can pond and allow sediment to separate from runoff.
2. Barrier shall allow for overflow from severe storm event.
3. Inspect barriers and remove sediment after each storm event. Sediment and gravel must be removed from the traveled way immediately.

NOT TO SCALE

DEPARTMENT OF
ECOLOGY
State of Washington

Block and Gravel Curb Inlet Protection

Revised June 2016

Curb and Gutter Sediment Barrier

Curb and gutter sediment barrier is a sandbag or rock berm (riprap and aggregate) 3 feet high and 3 feet wide in a horseshoe shape. See Figure II-3.19: Curb and Gutter Barrier. Design and installation specifications for curb and gutter sediment barrier include:

- Construct a horseshoe shaped berm, faced with coarse aggregate if using riprap, 3 feet high and 3 feet wide, at least 2 feet from the inlet.
- Construct a horseshoe shaped sedimentation trap on the upstream side of the berm. Size the trap to sediment trap standards for protecting a culvert inlet.

Figure II-3.19: Curb and Gutter Barrier

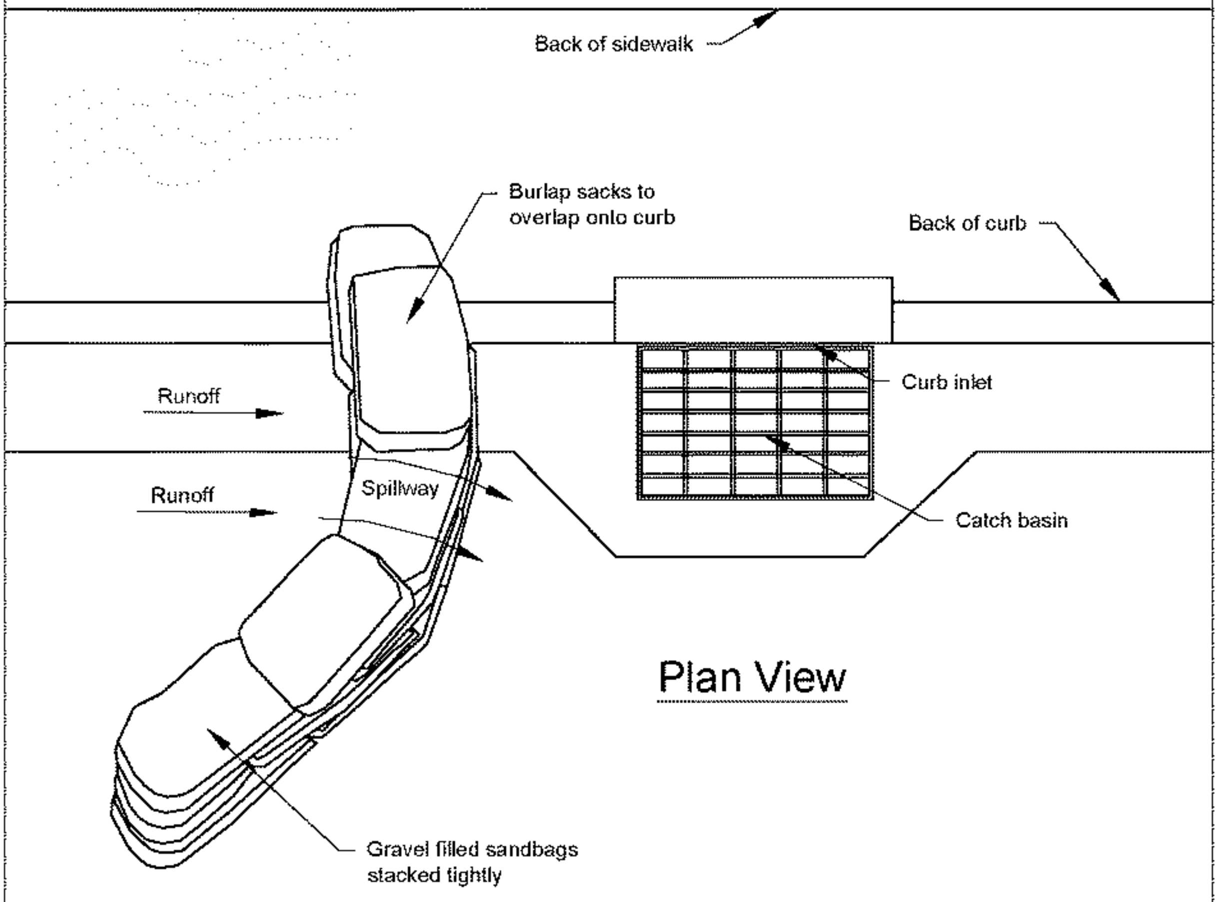

Notes:

1. Place curb type sediment barriers on gently sloping street segments, where water can pond and allow sediment to separate from runoff.
2. Sandbags of either burlap or woven 'geotextile' fabric, are filled with gravel, layered and packed tightly.
3. Leave a one sandbag gap in the top row to provide a spillway for overflow.
4. Inspect barriers and remove sediment after each storm event. Sediment and gravel must be removed from the traveled way immediately.

NOT TO SCALE

DEPARTMENT OF
ECOLOGY
State of Washington

Curb and Gutter Barrier

Revised June 2016

Maintenance Standards

- Inspect all forms of inlet protection frequently, especially after storm events. Clean and replace clogged catch basin filters. For rock and gravel filters, pull away the rocks from the inlet and clean or replace. An alternative approach would be to use the clogged rock as fill and put fresh rock around the inlet.
- Do not wash sediment into storm drains while cleaning. Spread all excavated material evenly over the surrounding land area or stockpile and stabilize as appropriate.

Approved as Functionally Equivalent

Ecology has approved products as able to meet the requirements of this BMP. The products did not pass through the Technology Assessment Protocol – Ecology (TAPE) process. Local jurisdictions may choose not to accept these products, or may require additional testing prior to consideration for local use. Products that Ecology has approved as functionally equivalent are available for review on Ecology's website at:

https://ecology.wa.gov/Regulations-Permits/Guidance-technical-assistance/Stormwater-permittee-guidance-resources/Emerging-stormwater-treatment-technologies

BMP C233: Silt Fence

Purpose

Silt fence reduces the transport of coarse sediment from a construction site by providing a temporary physical barrier to sediment and reducing the runoff velocities of overland flow.

Conditions of Use

Silt fence may be used downslope of all disturbed areas.

- Silt fence shall prevent sediment carried by runoff from going beneath, through, or over the top of the silt fence, but shall allow the water to pass through the fence.
- Silt fence is not intended to treat concentrated flows, nor is it intended to treat substantial amounts of overland flow. Convey any concentrated flows through the drainage system to a sediment trapping BMP.
- Do not construct silt fences in streams or use in V-shaped ditches. Silt fences do not provide an adequate method of silt control for anything deeper than sheet or overland flow.

Figure II-3.22: Silt Fence

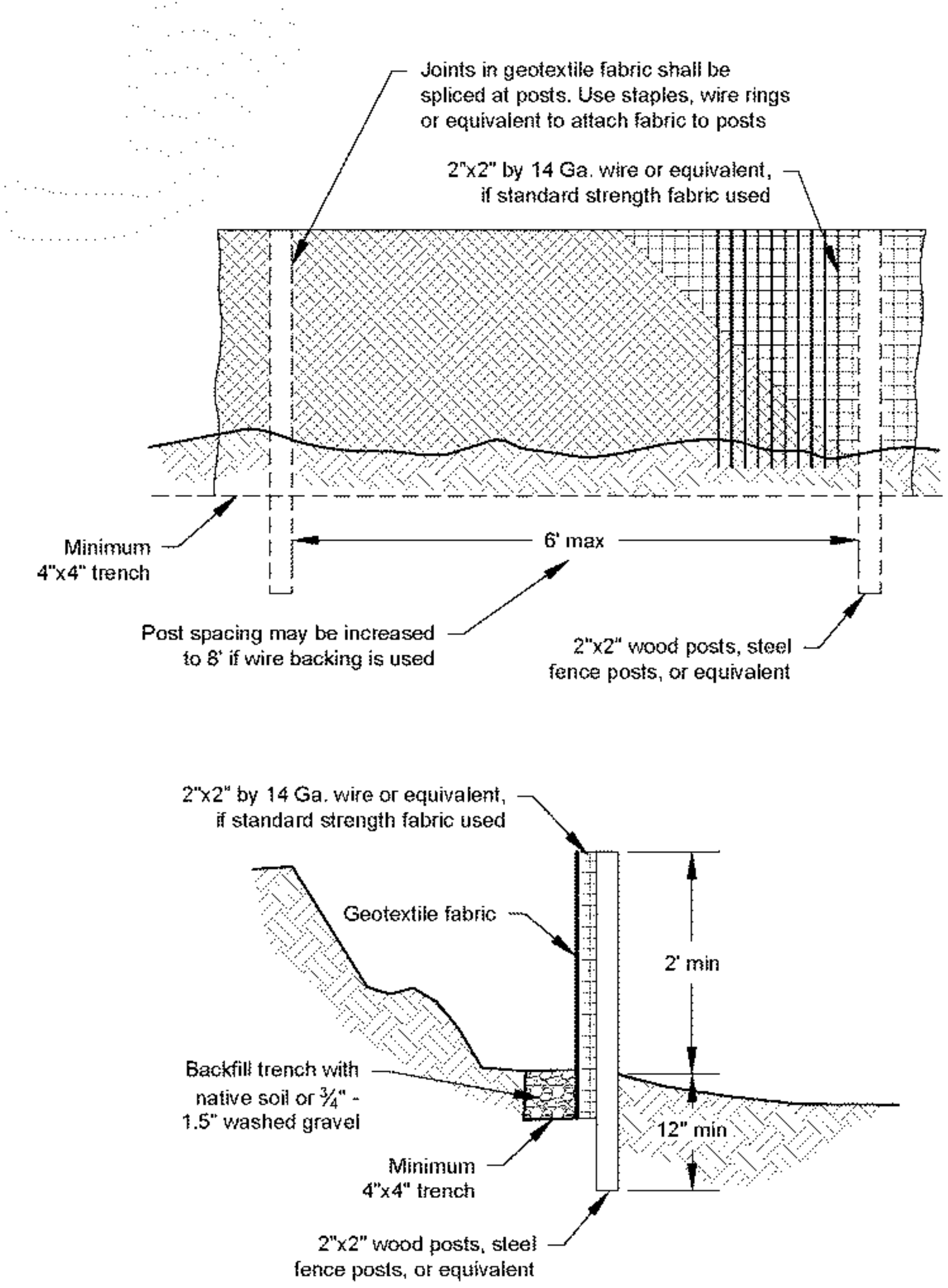

NOT TO SCALE

DEPARTMENT OF
ECOLOGY
State of Washington

Silt Fence

Revised July 2017

Design and Installation Specifications

- Use in combination with other construction stormwater BMPs.
- Maximum slope steepness (perpendicular to the silt fence line) 1H:1V.
- Maximum sheet or overland flow path length to the silt fence of 100 feet.
- Do not allow flows greater than 0.5 cfs.
- Use geotextile fabric that meets the following standards. All geotextile properties listed below are minimum average roll values (i.e., the test result for any sampled roll in a lot shall meet or exceed the values shown in Table II-3.11: Geotextile Fabric Standards for Silt Fence):

Table II-3.11: Geotextile Fabric Standards for Silt Fence

Geotextile Property	Minimum Average Roll Value
Polymeric Mesh AOS (ASTM D4751)	0.60 mm maximum for slit film woven (#30 sieve). 0.30 mm maximum for all other geotextile types (#50 sieve). 0.15 mm minimum for all fabric types (#100 sieve).
Water Permittivity (ASTM D4491)	0.02 sec^{-1} minimum
Grab Tensile Strength (ASTM D4632)	180 lbs. Minimum for extra strength fabric. 100 lbs minimum for standard strength fabric.
Grab Tensile Strength (ASTM D4632)	30% maximum
Ultraviolet Resistance (ASTM D4355)	70% minimum

- Support standard strength geotextiles with wire mesh, chicken wire, 2-inch x 2-inch wire, safety fence, or jute mesh to increase the strength of the geotextile. Silt fence materials are available that have synthetic mesh backing attached.
- Silt fence material shall contain ultraviolet ray inhibitors and stabilizers to provide a minimum of six months of expected usable construction life at a temperature range of 0°F to 120°F.
- One-hundred percent biodegradable silt fence is available that is strong, long lasting, and can be left in place after the project is completed, if permitted by the local jurisdiction.
- Refer to Figure II-3.22: Silt Fence for standard silt fence details. Include the following Standard Notes for silt fence on construction plans and specifications:
    1. The Contractor shall install and maintain temporary silt fences at the locations shown in the Plans.
    2. Construct silt fences in areas of clearing, grading, or drainage prior to starting those activities.

3. The silt fence shall have a 2-feet min. and a 2½-feet max. height above the original ground surface.
4. The geotextile fabric shall be sewn together at the point of manufacture to form fabric lengths as required. Locate all sewn seams at support posts. Alternatively, two sections of silt fence can be overlapped, provided that the overlap is long enough and that the adjacent silt fence sections are close enough together to prevent silt laden water from escaping through the fence at the overlap.
5. Attach the geotextile fabric on the up-slope side of the posts and secure with staples, wire, or in accordance with the manufacturer's recommendations. Attach the geotextile fabric to the posts in a manner that reduces the potential for tearing.
6. Support the geotextile fabric with wire or plastic mesh, dependent on the properties of the geotextile selected for use. If wire or plastic mesh is used, fasten the mesh securely to the up-slope side of the posts with the geotextile fabric up-slope of the mesh.
7. Mesh support, if used, shall consist of steel wire with a maximum mesh spacing of 2-inches, or a prefabricated polymeric mesh. The strength of the wire or polymeric mesh shall be equivalent to or greater than 180 lbs. grab tensile strength. The polymeric mesh must be as resistant to the same level of ultraviolet radiation as the geotextile fabric it supports.
8. Bury the bottom of the geotextile fabric 4-inches min. below the ground surface. Backfill and tamp soil in place over the buried portion of the geotextile fabric, so that no flow can pass beneath the silt fence and scouring cannot occur. When wire or polymeric back-up support mesh is used, the wire or polymeric mesh shall extend into the ground 3-inches min.
9. Drive or place the silt fence posts into the ground 18-inches min. A 12–inch min. depth is allowed if topsoil or other soft subgrade soil is not present and 18-inches cannot be reached. Increase fence post min. depths by 6 inches if the fence is located on slopes of 3H:1V or steeper and the slope is perpendicular to the fence. If required post depths cannot be obtained, the posts shall be adequately secured by bracing or guying to prevent overturning of the fence due to sediment loading.
10. Use wood, steel or equivalent posts. The spacing of the support posts shall be a maximum of 6-feet. Posts shall consist of either:
    - Wood with minimum dimensions of 2 inches by 2 inches by 3 feet. Wood shall be free of defects such as knots, splits, or gouges.
    - No. 6 steel rebar or larger.
    - ASTM A 120 steel pipe with a minimum diameter of 1-inch.
    - U, T, L, or C shape steel posts with a minimum weight of 1.35 lbs./ft.
    - Other steel posts having equivalent strength and bending resistance to the post sizes listed above.
11. Locate silt fences on contour as much as possible, except at the ends of the fence,

where the fence shall be turned uphill such that the silt fence captures the runoff water and prevents water from flowing around the end of the fence.

12. If the fence must cross contours, with the exception of the ends of the fence, place check dams perpendicular to the back of the fence to minimize concentrated flow and erosion. The slope of the fence line where contours must be crossed shall not be steeper than 3H:1V.
    - Check dams shall be approximately 1-foot deep at the back of the fence. Check dams shall be continued perpendicular to the fence at the same elevation until the top of the check dam intercepts the ground surface behind the fence.
    - Check dams shall consist of crushed surfacing base course, gravel backfill for walls, or shoulder ballast. Check dams shall be located every 10 feet along the fence where the fence must cross contours.

- Refer to Figure II-3.23: Silt Fence Installation by Slicing Method for slicing method details. The following are specifications for silt fence installation using the slicing method:
  1. The base of both end posts must be at least 2- to 4-inches above the top of the geotextile fabric on the middle posts for ditch checks to drain properly. Use a hand level or string level, if necessary, to mark base points before installation.
  2. Install posts 3- to 4-feet apart in critical retention areas and 6- to 7-feet apart in standard applications.
  3. Install posts 24-inches deep on the downstream side of the silt fence, and as close as possible to the geotextile fabric, enabling posts to support the geotextile fabric from upstream water pressure.
  4. Install posts with the nipples facing away from the geotextile fabric.
  5. Attach the geotextile fabric to each post with three ties, all spaced within the top 8-inches of the fabric. Attach each tie diagonally 45 degrees through the fabric, with each puncture at least 1-inch vertically apart. Each tie should be positioned to hang on a post nipple when tightening to prevent sagging.
  6. Wrap approximately 6-inches of the geotextile fabric around the end posts and secure with 3 ties.
  7. No more than 24-inches of a 36-inch geotextile fabric is allowed above ground level.
  8. Compact the soil immediately next to the geotextile fabric with the front wheel of the tractor, skid steer, or roller exerting at least 60 pounds per square inch. Compact the upstream side first and then each side twice for a total of four trips. Check and correct the silt fence installation for any deviation before compaction. Use a flat-bladed shovel to tuck the fabric deeper into the ground if necessary.

Figure II-3.23: Silt Fence Installation by Slicing Method

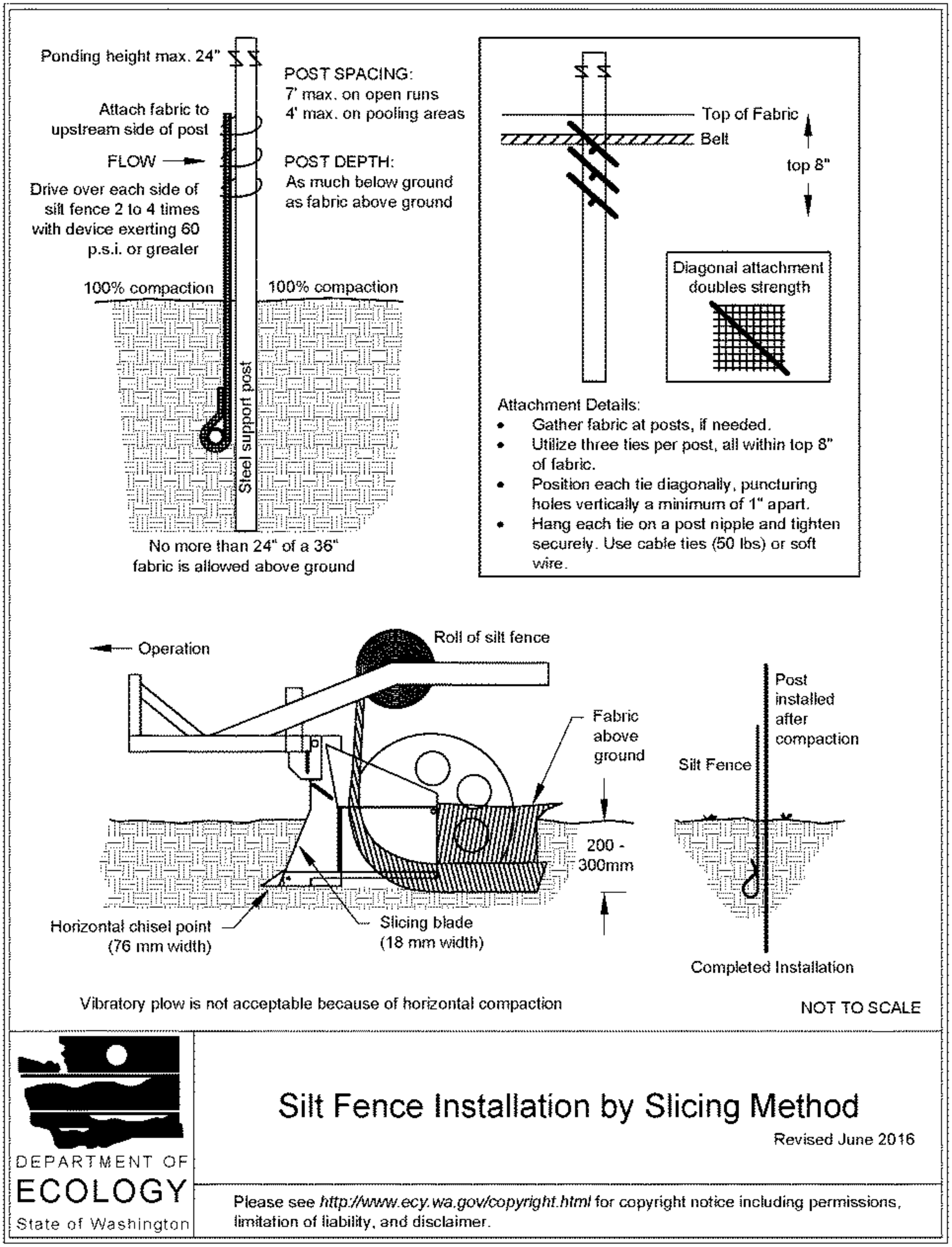

Attachment Details:

- Gather fabric at posts, if needed.
- Utilize three ties per post, all within top 8" of fabric.
- Position each tie diagonally, puncturing holes vertically a minimum of 1" apart.
- Hang each tie on a post nipple and tighten securely. Use cable ties (50 lbs) or soft wire.

Vibratory plow is not acceptable because of horizontal compaction

NOT TO SCALE

Silt Fence Installation by Slicing Method

Revised June 2016

Maintenance Standards

- Repair any damage immediately.
- Intercept and convey all evident concentrated flows uphill of the silt fence to a sediment trapping BMP.
- Check the uphill side of the silt fence for signs of the fence clogging and acting as a barrier to flow and then causing channelization of flows parallel to the fence. If this occurs, replace the fence and remove the trapped sediment.
- Remove sediment deposits when the deposit reaches approximately one-third the height of the silt fence, or install a second silt fence.
- Replace geotextile fabric that has deteriorated due to ultraviolet breakdown.

OPERATIONS AND MAINTENANCE GUIDELINES FOR PERMANENT BMPS

Table V-A.4: Maintenance Standards - Control Structure/Flow Restrictor

Maintenance Component	Defect	Condition When Maintenance is Needed	Results Expected When Maintenance is Performed
General	Trash and Debris (Includes Sediment)	Material exceeds 25% of sump depth or 1 foot below orifice plate.	Control structure orifice is not blocked. All trash and debris removed.
	Structural Damage	Structure is not securely attached to manhole wall. Structure is not in upright position (allow up to 10% from plumb). Connections to outlet pipe are not watertight and show signs of rust. Any holes - other than designed holes - in the structure.	Structure securely attached to wall and outlet pipe. Structure in correct position. Connections to outlet pipe are water tight; structure repaired or replaced and works as designed. Structure has no holes other than designed holes.
Cleanout Gate	Damaged or Missing	Cleanout gate is not watertight or is missing. Gate cannot be moved up and down by one maintenance person. Chain/rod leading to gate is missing or damaged. Gate is rusted over 50% of its surface area.	Gate is watertight and works as designed. Gate moves up and down easily and is watertight. Chain is in place and works as designed. Gate is repaired or replaced to meet design standards.
Orifice Plate	Damaged or Missing	Control device is not working properly due to missing, out of place, or bent orifice plate.	Plate is in place and works as designed.
	Obstructions	Any trash, debris, sediment, or vegetation blocking the plate.	Plate is free of all obstructions and works as designed.
Overflow Pipe	Obstructions	Any trash or debris blocking (or having the potential of blocking) the overflow pipe.	Pipe is free of all obstructions and works as designed.
Manhole	See Table V-A.3: Maintenance Standards - Closed Detention Systems (Tanks/Vaults)	See Table V-A.3: Maintenance Standards - Closed Detention Systems (Tanks/Vaults)	See Table V-A.3: Maintenance Standards - Closed Detention Systems (Tanks/Vaults)
Catch Basin	See Table V-A.5: Maintenance Standards - Catch Basins	See Table V-A.5: Maintenance Standards - Catch Basins	See Table V-A.5: Maintenance Standards - Catch Basins

Table V-A.5: Maintenance Standards - Catch Basins

Maintenance Component	Defect	Conditions When Maintenance is Needed	Results Expected When Maintenance is performed
General	Trash & Debris	Trash or debris which is located immediately in front of the catch basin opening or is blocking inletting capacity of the basin by more than 10%. Trash or debris (in the basin) that exceeds 60 percent of the sump depth as measured from the bottom of basin to invert of the lowest pipe into or out of the basin, but in no case less than a minimum of six inches clearance from the debris surface to the invert of the lowest pipe. Trash or debris in any inlet or outlet pipe blocking more than 1/3 of its height. Dead animals or vegetation that could generate odors that could cause complaints or dangerous gases (e.g., methane).	No Trash or debris located immediately in front of catch basin or on grate opening. No trash or debris in the catch basin. Inlet and outlet pipes free of trash or debris. No dead animals or vegetation present within the catch basin.
	Sediment	Sediment (in the basin) that exceeds 60 percent of the sump depth as measured from the bottom of basin to invert of the lowest pipe into or out of the basin, but in no case less than a minimum of 6 inches clearance from the sediment surface to the invert of the lowest pipe.	No sediment in the catch basin
	Structure Damage to Frame and/or Top Slab	Top slab has holes larger than 2 square inches or cracks wider than 1/4 inch. (Intent is to make sure no material is running into basin). Frame not sitting flush on top slab, i.e., separation of more than 3/4 inch of the frame from the top slab. Frame not securely attached	Top slab is free of holes and cracks. Frame is sitting flush on the riser rings or top slab and firmly attached.
	Fractures or Cracks in Basin Walls/ Bottom	Maintenance person judges that structure is unsound. Grout fillet has separated or cracked wider than 1/2 inch and longer than 1 foot at the joint of any inlet/outlet pipe or any evidence of soil particles entering catch basin through cracks.	Basin replaced or repaired to design standards. Pipe is regrouted and secure at basin wall.
	Settlement/ Misalignment	If failure of basin has created a safety, function, or design problem.	Basin replaced or repaired to design standards.
	Vegetation	Vegetation growing across and blocking more than 10% of the basin opening. Vegetation growing in inlet/outlet pipe joints that is more than six inches tall and less than six inches apart.	No vegetation blocking opening to basin. No vegetation or root growth present.
	Contamination and Pollution	See Table V-A.1: Maintenance Standards - Detention Ponds	No pollution present.
Catch Basin Cover	Cover Not in Place	Cover is missing or only partially in place. Any open catch basin requires maintenance.	Cover/grate is in place, meets design standards, and is secured
	Locking Mechanism Not Working	Mechanism cannot be opened by one maintenance person with proper tools. Bolts into frame have less than 1/2 inch of thread.	Mechanism opens with proper tools.
	Cover Difficult to Remove	One maintenance person cannot remove lid after applying normal lifting pressure. (Intent is keep cover from sealing off access to maintenance.)	Cover can be removed by one maintenance person.
Ladder	Ladder Rungs Unsafe	Ladder is unsafe due to missing rungs, not securely attached to basin wall, misalignment, rust, cracks, or sharp edges.	Ladder meets design standards and allows maintenance person safe access.
Metal Grates (If Applicable)	Grate opening Unsafe	Grate with opening wider than 7/8 inch.	Grate opening meets design standards.
	Trash and Debris	Trash and debris that is blocking more than 20% of grate surface inletting capacity.	Grate free of trash and debris.
	Damaged or Missing.	Grate missing or broken member(s) of the grate.	Grate is in place, meets the design standards, and is installed and aligned with the flow path.

Table V-A.6: Maintenance Standards - Debris Barriers (e.g., Trash Racks)

Maintenance Components	Defect	Condition When Maintenance is Needed	Results Expected When Maintenance is Performed
General	Trash and Debris	Trash or debris that is plugging more than 20% of the openings in the barrier.	Barrier cleared to design flow capacity.
Metal	Damaged/ Missing Bars.	Bars are bent out of shape more than 3 inches. Bars are missing or entire barrier missing. Bars are loose and rust is causing 50% deterioration to any part of barrier.	Bars in place with no bends more than 3/4 inch. Bars in place according to design. Barrier replaced or repaired to design standards.
	Inlet/Outlet Pipe	Debris barrier missing or not attached to pipe	Barrier firmly attached to pipe

Table V-A.7: Maintenance Standards - Energy Dissipators

Maintenance Components	Defect	Conditions When Maintenance is Needed	Results Expected When Maintenance is Performed
External:			
Rock Pad	Missing or Moved Rock	Only one layer of rock exists above native soil in area five square feet or larger, or any exposure of native soil.	Rock pad replaced to design standards.
	Erosion	Soil erosion in or adjacent to rock pad.	Rock pad replaced to design standards.
Dispersion Trench	Pipe Plugged with Sediment	Accumulated sediment that exceeds 20% of the design depth.	Pipe cleaned/flushed so that it matches design.
	Not Discharging Water Properly	Visual evidence of water discharging at concentrated points along trench (normal condition is a "sheet flow" of water along trench). Intent is to prevent erosion damage.	Trench redesigned or rebuilt to standards.
	Perforations Plugged.	Over 1/2 of perforations in pipe are plugged with debris and sediment.	Perforated pipe cleaned or replaced.
	Water Flows Out Top of "Distributor" Catch Basin.	Maintenance person observes or receives credible report of water flowing out during any storm less than the design storm or its causing or appears likely to cause damage.	Facility rebuilt or redesigned to standards.
	Receiving Area Over-Saturated	Water in receiving area is causing or has potential of causing landslide problems.	No danger of landslides.
Internal:			
Manhole/Chamber	Worn or Damaged Post, Baffles, Side of Chamber	Structure dissipating flow deteriorates to 1/2 of original size or any concentrated worn spot exceeding one square foot which would make structure unsound.	Structure replaced to design standards.
	Other Defects	See Table V-A.5: Maintenance Standards - Catch Basins	See Table V-A.5: Maintenance Standards - Catch Basins

Table V-A.21: Maintenance Standards - Bioretention Facilities

Maintenance Component	Recommended Frequency [a]		Condition when Maintenance is Needed (Standards)	Action Needed (Procedures)
	Inspection	Routine Maintenance		
Facility Footprint				
Earthen side slopes and berms	B, S		Erosion (gullies/ rills) greater than 2 inches deep around inlets, outlet, and alongside slopes	• Eliminate cause of erosion and stabilize damaged area (regrade, rock, vegetation, erosion control matting) • For deep channels or cuts (over 3 inches in ponding depth), temporary erosion control measures should be put in place until permanent repairs can be made. • Properly designed, constructed and established facilities with appropriate flow velocities should not have erosion problems except perhaps in extreme events. If erosion problems persist, the following should be reassessed: (1) flow volumes from contributing areas and bioretention facility sizing; (2) flow velocities and gradients within the facility; and (3) flow dissipation and erosion protection strategies at the facility inlet.
	A		Erosion of sides causes slope to become a hazard	Take actions to eliminate the hazard and stabilize slopes
	A, S		Settlement greater than 3 inches (relative to undisturbed sections of berm)	Restore to design height
	A, S		Downstream face of berm wet, seeps or leaks evident	Plug any holes and compact berm (may require consultation with engineer, particularly for larger berms)
	A		Any evidence of rodent holes or water piping in berm	• Eradicate rodents (see "Pest control") • Fill holes and compact (may require consultation with engineer, particularly for larger berms)
Concrete sidewalls	A		Cracks or failure of concrete sidewalls	• Repair/ seal cracks • Replace if repair is insufficient
Rockery sidewalls	A		Rockery side walls are insecure	Stabilize rockery sidewalls (may require consultation with engineer, particularly for walls 4 feet or greater in height)
Facility area		All maintenance visits (at least biannually)	Trash and debris present	Clean out trash and debris
Facility bottom area	A, S		Accumulated sediment to extent that infiltration rate is reduced (see "Ponded water") or surface storage capacity significantly impacted	• Remove excess sediment • Replace any vegetation damaged or destroyed by sediment accumulation and removal • Mulch newly planted vegetation • Identify and control the sediment source (if feasible) • If accumulated sediment is recurrent, consider adding presettlement or installing berms to create a forebay at the inlet
		During/after fall leaf drop	Accumulated leaves in facility	Remove leaves if there is a risk to clogging outlet structure or water flow is impeded
Low permeability check dams and weirs	A, S		Sediment, vegetation, or debris accumulated at or blocking (or having the potential to block) check dam, flow control weir or orifice	Clear the blockage
	A, S		Erosion and/or undercutting present	Repair and take preventative measures to prevent future erosion and/or undercutting
	A		Grade board or top of weir damaged or not level	Restore to level position

Table V-A.21: Maintenance Standards - Bioretention Facilities (continued)

Maintenance Component	Recommended Frequency [a]		Condition when Maintenance is Needed (Standards)	Action Needed (Procedures)
	Inspection	Routine Maintenance		
Ponded water	B, S		Excessive ponding water: Water overflows during storms smaller than the design event or ponded water remains in the basin 48 hours or longer after the end of a storm.	Determine cause and resolve in the following order: 1. Confirm leaf or debris buildup in the bottom of the facility is not impeding infiltration. If necessary, remove leaf litter/debris. 2. Ensure that underdrain (if present) is not clogged. If necessary, clear underdrain. 3. Check for other water inputs (e.g., groundwater, illicit connections). 4. Verify that the facility is sized appropriately for the contributing area. Confirm that the contributing area has not increased. If steps #1-4 do not solve the problem, the bioretention soil is likely clogged by sediment accumulation at the surface or has become overly compacted. Dig a small hole to observe soil profile and identify compaction depth or clogging front to help determine the soil depth to be removed or otherwise rehabilitated (e.g., tilled). Consultation with an engineer is recommended.
Bioretention soil mix	As needed		Bioretention soil mix protection is needed when performing maintenance requiring entrance into the facility footprint	• Minimize all loading in the facility footprint (foot traffic and other loads) to the degree feasible in order to prevent compaction of bioretention soils. • Never drive equipment or apply heavy loads in facility footprint. • Because the risk of compaction is higher during saturated soil conditions, any type of loading in the cell (including foot traffic) should be minimized during wet conditions. • Consider measures to distribute loading if heavy foot traffic is required or equipment must be placed in facility. As an example, boards may be placed across soil to distribute loads and minimize compaction. • If compaction occurs, soil must be loosened or otherwise rehabilitated to original design state.
Inlets/Outlets/Pipes				
Splash block inlet	A		Water is not being directed properly to the facility and away from the inlet structure	Reconfigure/ repair blocks to direct water to facility and away from structure
Curb cut inlet/outlet	M during the wet season and before severe storm is forecasted	Weekly during fall leaf drop	Accumulated leaves at curb cuts	Clear leaves (particularly important for key inlets and low points along long, linear facilities)
Pipe inlet/outlet	A		Pipe is damaged	Repair/ replace
	W		Pipe is clogged	Remove roots or debris
	A, S		Sediment, debris, trash, or mulch reducing capacity of inlet/outlet	• Clear the blockage • Identify the source of the blockage and take actions to prevent future blockages
		Weekly during fall leaf drop	Accumulated leaves at inlets/outlets	Clear leaves (particularly important for key inlets and low points along long, linear facilities)
		A	Maintain access for inspections	• Clear vegetation (transplant vegetation when possible) within 1 foot of inlets and outlets, maintain access pathways • Consultation with a landscape architect is recommended for removal, transplant, or substitution of plants

Table V-A.21: Maintenance Standards - Bioretention Facilities (continued)

Maintenance Component	Recommended Frequency [a]		Condition when Maintenance is Needed (Standards)	Action Needed (Procedures)
	Inspection	Routine Maintenance		
Erosion control at inlet	A		Concentrated flows are causing erosion	Maintain a cover of rock or cobbles or other erosion protection measure (e.g., matting) to protect the ground where concentrated water enters the facility (e.g., a pipe, curb cut or swale)
Trash rack	S		Trash or other debris present on trash rack	Remove/dispose
	A		Bar screen damaged or missing	Repair/replace
Overflow	A, S		Capacity reduced by sediment or debris	Remove sediment or debris/dispose
Underdrain pipe	Clean pipe as needed	Clean orifice at least biannually (may need more frequent cleaning during wet season)	• Plant roots, sediment or debris reducing capacity of underdrain • Prolonged surface ponding (see "Ponded water"	• Jet clean or rotary cut debris/roots from underdrain(s) • If underdrains are equipped with a flow restrictor (e.g., orifice) to attenuate flows, the orifice must be cleaned regularly.
Vegetation				
Facility bottom area and upland slope vegetation	Fall and Spring		Vegetation survival rate falls below 75% within first two years of establishment (unless project O&M manual or record drawing stipulates more or less than 75% survival rate).	• Determine cause of poor vegetation growth and correct condition • Replant as necessary to obtain 75% survival rate or greater. Refer to original planting plan, or approved jurisdictional species list for appropriate plant replacements (See Appendix 3 - Bioretention Plant List, in the *LID Technical Guidance Manual for Puget Sound*, (Hinman and Wulkan, 2012)). • Confirm that plant selection is appropriate for site growing conditions • Consultation with a landscape architect is recommended for removal, transplant, or substitution of plants
Vegetation (general)	As needed		Presence of diseased plants and plant material	• Remove any diseased plants or plant parts and dispose of in an approved location (e.g., commercial landfill) to avoid risk of spreading the disease to other plants • Disinfect gardening tools after pruning to prevent the spread of disease • See the *Pacific Northwest Plant Disease Management Handbook* (Pscheidt and Ocamb, 2016) for information on disease recognition and for additional resources • Replant as necessary according to recommendations provided for "facility bottom area and upland slope vegetation".
Trees and shrubs		All pruning seasons (timing varies by species)	Pruning as needed	• Prune trees and shrubs in a manner appropriate for each species. Pruning should be performed by landscape professionals familiar with proper pruning techniques • All pruning of mature trees should be performed by or under the direct guidance of an ISA certified arborist
	A		Large trees and shrubs interfere with operation of the facility or access for maintenance	• Prune trees and shrubs using most current ANSI A300 standards and ISA BMPs. • Remove trees and shrubs, if necessary.
	Fall and Spring		Standing dead vegetation is present	• Remove standing dead vegetation • Replace dead vegetation within 30 days of reported dead and dying plants (as practical depending on weather/planting season) • If vegetation replacement is not feasible within 30 days, and absence of vegetation may result in erosion problems, temporary erosion control measures should be put in place immediately. • Determine cause of dead vegetation and address issue, if possible

Table V-A.21: Maintenance Standards - Bioretention Facilities (continued)

Maintenance Component	Recommended Frequency [a]		Condition when Maintenance is Needed (Standards)	Action Needed (Procedures)
	Inspection	Routine Maintenance		
				• If specific plants have a high mortality rate, assess the cause and replace with appropriate species. Consultation with a landscape architect is recommended.
	Fall and Spring		Planting beneath mature trees	• When working around and below mature trees, follow the most current ANSI A300 standards and ISA BMPs to the extent practicable (e.g., take care to minimize any damage to tree roots and avoid compaction of soil). • Planting of small shrubs or groundcovers beneath mature trees may be desirable in some cases; such plantings should use mainly plants that come as bulbs, bare root or in 4-inch pots; plants should be in no larger than 1-gallon containers.
	Fall and Spring		Presence of or need for stakes and guys (tree growth, maturation, and support needs)	• Verify location of facility liners and underdrain (if any) prior to stake installation in order to prevent liner puncture or pipe damage • Monitor tree support systems: Repair and adjust as needed to provide support and prevent damage to tree. • Remove tree supports (stakes, guys, etc.) after one growing season or maximum of 1 year. • Backfill stake holes after removal.
Trees and shrubs adjacent to vehicle travel areas (or areas where visibility needs to be maintained)	A		Vegetation causes some visibility (line of sight) or driver safety issues	• Maintain appropriate height for sight clearance • When continued, regular pruning (more than one time/ growing season) is required to maintain visual sight lines for safety or clearance along a walk or drive, consider relocating the plant to a more appropriate location. • Remove or transplant if continual safety hazard • Consultation with a landscape architect is recommended for removal, transplant, or substitution of plants
Flowering plants		A	Dead or spent flowers present	Remove spent flowers (deadhead)
Perennials		Fall	Spent plants	Cut back dying or dead and fallen foliage and stems
Emergent vegetation		Spring	Vegetation compromises conveyance	Hand rake sedges and rushes with a small rake or fingers to remove dead foliage before new growth emerges in spring or earlier only if the foliage is blocking water flow (sedges and rushes do not respond well to pruning)
Ornamental grasses (perennial)		Winter and Spring	Dead material from previous year's growing cycle or dead collapsed foliage	• Leave dry foliage for winter interest • Hand rake with a small rake or fingers to remove dead foliage back to within several inches from the soil before new growth emerges in spring or earlier if the foliage collapses and is blocking water flow
Ornamental grasses (evergreen)		Fall and Spring	Dead growth present in spring	• Hand rake with a small rake or fingers to remove dead growth before new growth emerges in spring • Clean, rake, and comb grasses when they become too tall • Cut back to ground or thin every 2-3 years as needed
Noxious weeds		M (March - October, preceding seed dispersal)	Listed noxious vegetation is present (refer to current county noxious weed list)	• By law, class A & B noxious weeds must be removed, bagged and disposed as garbage immediately • Reasonable attempts must be made to remove and dispose of class C noxious weeds • It is strongly encouraged that herbicides and pesticides not be used in order to protect water quality; use of herbicides and pesticides may be prohibited in some jurisdictions • Apply mulch after weed removal (see "Mulch")
Weeds		M (March - October,	Weeds are present	• Remove weeds with their roots manually with pincer-type weeding tools, flame weeders, or hot water weeders as

Table V-A.21: Maintenance Standards - Bioretention Facilities (continued)

Maintenance Component	Recommended Frequency [a]		Condition when Maintenance is Needed (Standards)	Action Needed (Procedures)
	Inspection	Routine Maintenance		
		preceding seed dispersal)		appropriate • Follow IPM protocols for weed management (see "Additional Maintenance Resources" section for more information on IPM protocols)
Excessive vegetation		Once in early to mid- May and once in early- to mid-September	Low-lying vegetation growing beyond facility edge onto sidewalks, paths, or street edge poses pedestrian safety hazard or may clog adjacent permeable pavement surfaces due to associated leaf litter, mulch, and soil	• Edge or trim groundcovers and shrubs at facility edge • Avoid mechanical blade-type edger and do not use edger or trimmer within 2 feet of tree trunks • While some clippings can be left in the facility to replenish organic material in the soil, excessive leaf litter can cause surface soil clogging
	As needed		Excessive vegetation density inhibits stormwater flow beyond design ponding or becomes a hazard for pedestrian and vehicular circulation and safety	• Determine whether pruning or other routine maintenance is adequate to maintain proper plant density and aesthetics • Determine if planting type should be replaced to avoid ongoing maintenance issues (an aggressive grower under perfect growing conditions should be transplanted to a location where it will not impact flow) • Remove plants that are weak, broken or not true to form; replace in-kind • Thin grass or plants impacting facility function without leaving visual holes or bare soil areas • Consultation with a landscape architect is recommended for removal, transplant, or substitution of plants
	As needed		Vegetation blocking curb cuts, causing excessive sediment buildup and flow bypass	Remove vegetation and sediment buildup
Mulch				
Mulch		Following weeding	Bare spots (without mulch cover) are present or mulch depth less than 2 inches	• Supplement mulch with hand tools to a depth of 2 to 3 inches • Replenish mulch per O&M manual. Often coarse compost is used in the bottom of the facility and arborist wood chips are used on side slopes and rim (above typical water levels) • Keep all mulch away from woody stems
Watering				
Irrigation system (if any)		Based on manufacturer's instructions	Irrigation system present	Follow manufacturer's instructions for O&M
	A		Sprinklers or drip irrigation not directed/located to properly water plants	Redirect sprinklers or move drip irrigation to desired areas
Summer watering (first year)		Once every 1-2 weeks or as needed during prolonged dry periods	Trees, shrubs and groundcovers in first year of establishment period	• 10 to 15 gallons per tree • 3 to 5 gallons per shrub • 2 gallons water per square foot for groundcover areas • Water deeply, but infrequently, so that the top 6 to 12 inches of the root zone is moist • Use soaker hoses or spot water with a shower type wand when irrigation system is not present ○ Pulse water to enhance soil absorption, when feasible

Table V-A.21: Maintenance Standards - Bioretention Facilities (continued)

Maintenance Component	Recommended Frequency [a]		Condition when Maintenance is Needed (Standards)	Action Needed (Procedures)
	Inspection	Routine Maintenance		
				◦ Pre-moisten soil to break surface tension of dry or hydrophobic soils/mulch, followed by several more passes. With this method , each pass increases soil absorption and allows more water to infiltrate prior to runoff • Add a tree bag or slow-release watering device (e.g., bucket with a perforated bottom) for watering newly installed trees when irrigation system is not present
Summer watering (second and third years)		Once every 2-4 weeks or as needed during prolonged dry periods	Trees, shrubs and groundcovers in second or third year of establishment period	• 10 to 15 gallons per tree • 3 to 5 gallons per shrub • 2 gallons water per square foot for groundcover areas • Water deeply, but infrequently, so that the top 6 to 12 inches of the root zone is moist • Use soaker hoses or spot water with a shower type wand when irrigation system is not present ◦ Pulse water to enhance soil absorption, when feasible ◦ Pre-moisten soil to break surface tension of dry or hydrophobic soils/mulch, followed by several more passes. With this method , each pass increases soil absorption and allows more water to infiltrate prior to runoff
Summer watering (after establishment)		As needed	Established vegetation (after 3 years)	• Plants are typically selected to be drought tolerant and not require regular watering after establishment; however, trees may take up to 5 years of watering to become fully established • Identify trigger mechanisms for drought-stress (e.g., leaf wilt, leaf senescence, etc.) of different species and water immediately after initial signs of stress appear • Water during drought conditions or more often if necessary to maintain plant cover
Pest Control				
Mosquitoes	B, S		Standing water remains for more than 3 days after the end of a storm	• Identify the cause of the standing water and take appropriate actions to address the problem (see "Ponded water") • To facilitate maintenance, manually remove standing water and direct to the storm drainage system (if runoff is from non pollution-generating surfaces) or sanitary sewer system (if runoff is from pollution-generating surfaces) after getting approval from sanitary sewer authority. • Use of pesticides or *Bacillus thuringiensis israelensis* (Bti) may be considered only as a temporary measure while addressing the standing water cause. If overflow to a surface water will occur within 2 weeks after pesticide use, apply for coverage under the Aquatic Mosquito Control NPDES General Permit.
Nuisance animals	As needed		Nuisance animals causing erosion, damaging plants, or depositing large volumes of feces	• Reduce site conditions that attract nuisance species where possible (e.g., plant shrubs and tall grasses to reduce open areas for geese, etc.) • Place predator decoys • Follow IPM protocols for specific nuisance animal issues (see "Additional Maintenance Resources" section for more information on IPM protocols) • Remove pet waste regularly • For public and right-of-way sites consider adding garbage cans with dog bags for picking up pet waste.
Insect pests	Every site visit associated with		Signs of pests, such as wilting leaves, chewed leaves and bark, spotting or other indicators	• Reduce hiding places for pests by removing diseased and dead plants • For infestations, follow IPM protocols (see "Additional Maintenance Resources" section for more information on IPM

Table V-A.21: Maintenance Standards - Bioretention Facilities (continued)

Maintenance Component	Recommended Frequency [a]		Condition when Maintenance is Needed (Standards)	Action Needed (Procedures)
	Inspection	Routine Maintenance		
	vegetation management			protocols)

Note that the inspection and routine maintenance frequencies listed above are recommended by Ecology. They do not supersede or replace the municipal stormwater permit requirements for inspection frequency required of municipal stormwater permittees for "stormwater treatment and flow control BMPs/facilities".

[a] Frequency: A = Annually; B = Biannually (twice per year); M = Monthly; W = At least one visit should occur during the wet season (for debris/clog related maintenance, this inspection/maintenance visit should occur in the early fall, after deciduous trees have lost their leaves); S = Perform inspections after major storm events (24-hour storm event with a 10-year or greater recurrence interval).

IPM - Integrated Pest Management

ISA - International Society of Arboriculture

Appendix I

Conveyance Analysis

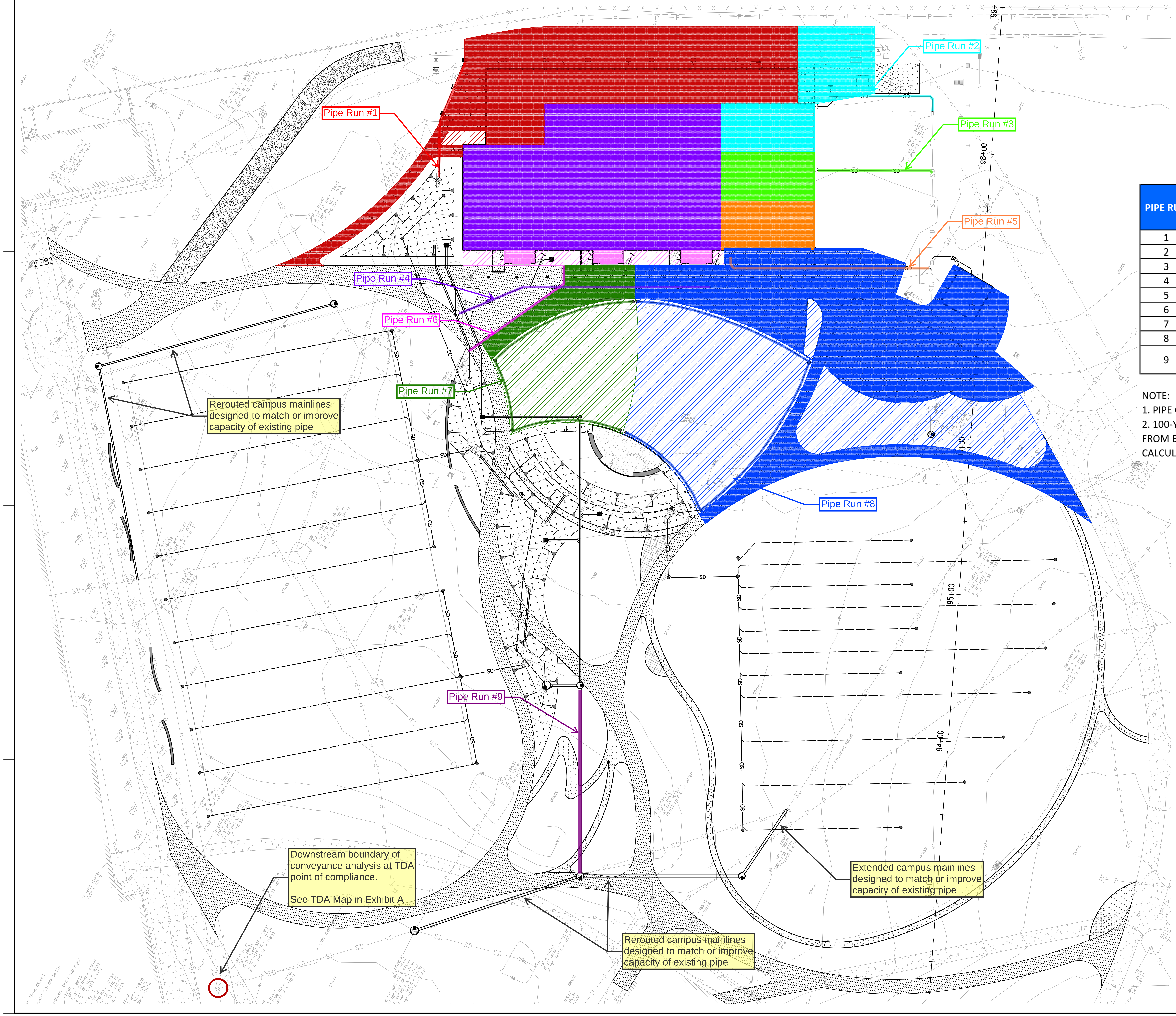

LEGEND

—SD—	STORM DRAIN LESS THAN 12"
═	STORM DRAIN 12" AND LARGER
– – –	PERFORATED STORM DRAIN
■	STORM DRAIN CATCH BASIN
•	STORM DRAIN CLEANOUT
⊙	STORM DRAIN MANHOLE
▨	BIORETENTION PLANTER

PIPE RUN	SIZE	SLOPE	CAPACITY (CFS) *SEE NOTE 1*	25-YEAR PEAK FLOW (CFS)
1	8"	0.50%	1.11	0.27
2	8"	1.00%	1.57	0.09
3	8"	2.34%	2.40	0.04
4	8"	0.50%	1.11	0.29
5	8"	1.20%	1.72	0.04
6	12"	1.16%	5.29	0.02
7	6"	0.50%	0.52	0.10
8	6"	0.50%	0.52	0.51
9	18"	0.50%	9.66	4.11 *SEE NOTE 2*

NOTE:
1. PIPE CAPACITY DETERMINED USING MANNINGS EQUATION.
2. 100-YEAR PEAK FLOW USED SO AS TO INCLUDE OVERFLOW FROM BIORETENTION FACILITY. REFER TO APPENDIX F FOR CALCULATIONS.

0 15 30 60
1 inch = 30 feet

Call 811 two business days before you dig

DLR Group
© DLR Group

PRELIMINARY

kpff
1601 5th Avenue, Suite 1600
Seattle, WA 98101
206.622.5822
www.kpff.com

Washington State Department of CHILDREN, YOUTH & FAMILIES

GREEN HILL SCHOOL RECREATION BUILDING
375 SW 11TH STREET
CHEHALIS, WA 98532

60% CONSTRUCTION DOCUMENTS
December 18, 2020
Revisions

73-18130-00

STORM DRAIN PLAN - OVERALL

C500

\\kpff\dts\Civil\1800001-1809999\1800416 GHS Recreation Building Replacement\Engineer\LRC\2021-01-13 Capacity Analysis\C500.dwg
LisaC
Jan 18, 2021 - 4:59pm

MGS FLOOD
PROJECT REPORT

Program Version: MGSFlood 4.52
Program License Number: 200410007
Project Simulation Performed on: 01/22/2021 12:31 PM
Report Generation Date: 01/22/2021 12:33 PM

Input File Name:	GHSModeling_Capacity.fld
Project Name:	GHS Rec Building
Analysis Title:	Capacity Analysis
Comments:	.

PRECIPITATION INPUT

Computational Time Step (Minutes): 15

Extended Precipitation Time Series Selected
Climatic Region Number: 5

Full Period of Record Available used for Routing
Precipitation Station : 95004805 Puget West 48 in_5min 10/01/1939-10/01/2097
Evaporation Station : 951048 Puget West 48 in MAP
Evaporation Scale Factor : 0.750

HSPF Parameter Region Number: 1
HSPF Parameter Region Name : USGS Default

********** Default HSPF Parameters Used (Not Modified by User) ***************

********************** WATERSHED DEFINITION ***********************

Predevelopment/Post Development Tributary Area Summary

	Predeveloped	Post Developed
Total Subbasin Area (acres)	2.029	2.029
Area of Links that Include Precip/Evap (acres)	0.000	0.000
Total (acres)	2.029	2.029

---------------------SCENARIO: PREDEVELOPED

Number of Subbasins: 1

---------- Subbasin : Project Site ----------

	-------Area (Acres) --------
Till Grass	0.607
Impervious	1.422
Subbasin Total	2.029

```
--------------------SCENARIO: POSTDEVELOPED
Number of Subbasins:   8

  ---------- Subbasin : Subbasin 1 ----------
                               -------Area (Acres) --------
Till Grass                     0.007
Impervious                     0.340
----------------------------------------------
Subbasin Total                 0.347

  ---------- Subbasin : Subbasin 2 ----------
                               -------Area (Acres) --------
Impervious                     0.109
----------------------------------------------
Subbasin Total                 0.109

  ---------- Subbasin : Subbasin 3 ----------
                               -------Area (Acres) --------
Impervious                     0.048
----------------------------------------------
Subbasin Total                 0.048

  ---------- Subbasin : Subbasin 4 ----------
                               -------Area (Acres) --------
Impervious                     0.363
----------------------------------------------
Subbasin Total                 0.363

  ---------- Subbasin : Subbasin 5 ----------
                               -------Area (Acres) --------
Impervious                     0.047
----------------------------------------------
Subbasin Total                 0.047

  ---------- Subbasin : Subbasin 6 ----------
                               -------Area (Acres) --------
Till Grass                     0.031
Impervious                     0.013
----------------------------------------------
Subbasin Total                 0.044

  ---------- Subbasin : Subbasin 7 ----------
                               -------Area (Acres) --------
Till Grass                     0.157
Impervious                     0.046
----------------------------------------------
Subbasin Total                 0.203
```

```
 ---------- Subbasin : Subbasin 8 ----------
                    -------Area (Acres) --------
Till Grass              0.413
Impervious              0.456
----------------------------------------------
Subbasin Total          0.869



************************* LINK DATA *******************************

----------------------SCENARIO: PREDEVELOPED
Number of Links:   0


************************* LINK DATA *******************************

----------------------SCENARIO: POSTDEVELOPED
Number of Links:   0


**********************FLOOD FREQUENCY AND DURATION STATISTICS*******************

---------------------SCENARIO: PREDEVELOPED
Number of Subbasins:   1
Number of Links:   0


---------------------SCENARIO: POSTDEVELOPED
Number of Subbasins:   8
Number of Links:   0

********** Subbasin: Subbasin 2 **********

 Flood Frequency Data(cfs)
 (Recurrence Interval Computed Using Gringorten Plotting Position)
Tr (yrs)          Flood Peak (cfs)
========================================
   2-Year         4.820E-02
   5-Year         6.031E-02
   10-Year        7.081E-02
   25-Year        8.556E-02
   50-Year        9.752E-02
   100-Year       0.115
   200-Year       0.117
   500-Year       0.119
```

PIPE RUN #2

```
********** Subbasin: Subbasin 3 **********

 Flood Frequency Data(cfs)
 (Recurrence Interval Computed Using Gringorten Plotting Position)
Tr (yrs)          Flood Peak (cfs)
========================================
   2-Year         2.109E-02
```

PIPE RUN #3

```
   5-Year        2.639E-02
   10-Year       3.099E-02
   25-Year       3.744E-02
   50-Year       4.268E-02
   100-Year      5.037E-02
   200-Year      5.117E-02
   500-Year      5.220E-02
```

PIPE RUN #4

```
********** Subbasin: Subbasin 4 **********

 Flood Frequency Data(cfs)
 (Recurrence Interval Computed Using Gringorten Plotting Position)
Tr (yrs)            Flood Peak (cfs)
========================================
   2-Year        0.161
   5-Year        0.201
   10-Year       0.236
   25-Year       0.285
   50-Year       0.325
   100-Year      0.383
   200-Year      0.389
   500-Year      0.397
```

PIPE RUN #5

```
********** Subbasin: Subbasin 5 **********

 Flood Frequency Data(cfs)
 (Recurrence Interval Computed Using Gringorten Plotting Position)
Tr (yrs)            Flood Peak (cfs)
========================================
   2-Year        2.092E-02
   5-Year        2.617E-02
   10-Year       3.073E-02
   25-Year       3.713E-02
   50-Year       4.232E-02
   100-Year      4.994E-02
   200-Year      5.074E-02
   500-Year      5.176E-02
```

PIPE RUN #6

```
********** Subbasin: Subbasin 6 **********

 Flood Frequency Data(cfs)
 (Recurrence Interval Computed Using Gringorten Plotting Position)
Tr (yrs)            Flood Peak (cfs)
========================================
   2-Year        1.053E-02
   5-Year        1.457E-02
   10-Year       1.778E-02
   25-Year       2.297E-02
   50-Year       2.577E-02
   100-Year      3.123E-02
   200-Year      3.288E-02
   500-Year      3.494E-02
```

```
********** Subbasin: Subbasin 7 **********

 Flood Frequency Data(cfs)
 (Recurrence Interval Computed Using Gringorten Plotting Position)
Tr (yrs)          Flood Peak (cfs)
========================================
   2-Year         4.379E-02
   5-Year         6.399E-02
   10-Year        7.750E-02
   25-Year        0.101
   50-Year        0.112
   100-Year       0.143
   200-Year       0.148
   500-Year       0.153
```

PIPE RUN #7

```
********** Subbasin: Subbasin 8 **********

 Flood Frequency Data(cfs)
 (Recurrence Interval Computed Using Gringorten Plotting Position)
Tr (yrs)          Flood Peak (cfs)
========================================
   2-Year         0.266
   5-Year         0.346
   10-Year        0.396
   25-Year        0.510
   50-Year        0.636
   100-Year       0.655
   200-Year       0.722
   500-Year       0.812
```

PIPE RUN #8

```
 ***********Groundwater Recharge Summary *************
Recharge is computed as input to Perlnd Groundwater Plus Infiltration in Structures

                 Total Predeveloped Recharge During Simulation
Model Element                               Recharge Amount (ac-ft)
-----------------------------------------------------------------------------------------
Subbasin: Project Site              80.961

_____________________________________________________
Total:                                       80.961

               Total Post Developed Recharge During Simulation
Model Element                               Recharge Amount (ac-ft)
-----------------------------------------------------------------------------------------
Subbasin: Subbasin 1                0.867
Subbasin: Subbasin 2                0.000
Subbasin: Subbasin 3                0.000
Subbasin: Subbasin 4                0.000
Subbasin: Subbasin 5                0.000
Subbasin: Subbasin 6                4.081
Subbasin: Subbasin 7                20.940
Subbasin: Subbasin 8                55.085

_____________________________________________________
```

```
Total:                                    80.974

Total Predevelopment Recharge is Less than Post Developed
Average Recharge Per Year, (Number of Years= 158)
Predeveloped:    0.512 ac-ft/year,    Post Developed:    0.512 ac-ft/year

 ***********Water Quality Facility Data *************

--------------------SCENARIO: PREDEVELOPED

Number of Links:   0


--------------------SCENARIO: POSTDEVELOPED

Number of Links:   0



 ***********Compliance Point Results *************

Scenario Predeveloped Compliance Subbasin: Project Site

Scenario Postdeveloped Compliance Subbasin: Subbasin 1


     *** Point of Compliance Flow Frequency Data ***
     Recurrence Interval Computed Using Gringorten Plotting Position

      Predevelopment Runoff                  Postdevelopment Runoff
Tr (Years)       Discharge (cfs)           Tr (Years)      Discharge (cfs)
----------------------------------------------------------------------------------------------------------------
   2-Year                 0.729               2-Year              0.151
   5-Year                 0.911               5-Year              0.189
   10-Year                1.059               10-Year             0.222
   25-Year                1.300               25-Year             0.269
   50-Year                1.618               50-Year             0.308
   100-Year               1.756               100-Year            0.362
   200-Year               1.868               200-Year            0.368
   500-Year               2.016               500-Year            0.377
 ** Record too Short to Compute Peak Discharge for These Recurrence Intervals


**** Flow Duration Performance ****
Excursion at Predeveloped 50%Q2 (Must be Less Than or Equal to 0%):            -100.0%    PASS
Maximum Excursion from 50%Q2 to Q2 (Must be Less Than or Equal to 0%):          -99.9%    PASS
Maximum Excursion from Q2 to Q50 (Must be less than 10%):                       -90.0%    PASS
Percent Excursion from Q2 to Q50 (Must be less than 50%):                         0.0%    PASS

-------------------------------------------------------------------------------------------
MEETS ALL FLOW DURATION DESIGN CRITERIA:    PASS
-------------------------------------------------------------------------------------------


**** LID Duration Performance ****
Excursion at Predeveloped 8%Q2 (Must be Less Than 0%):                  -94.4%      PASS
```

PIPE RUN #1

Maximum Excursion from 8%Q2 to 50%Q2 (Must be Less Than 0%): -96.0% PASS

MEETS ALL LID DURATION DESIGN CRITERIA: PASS

Appendix J

Off-Site Analysis

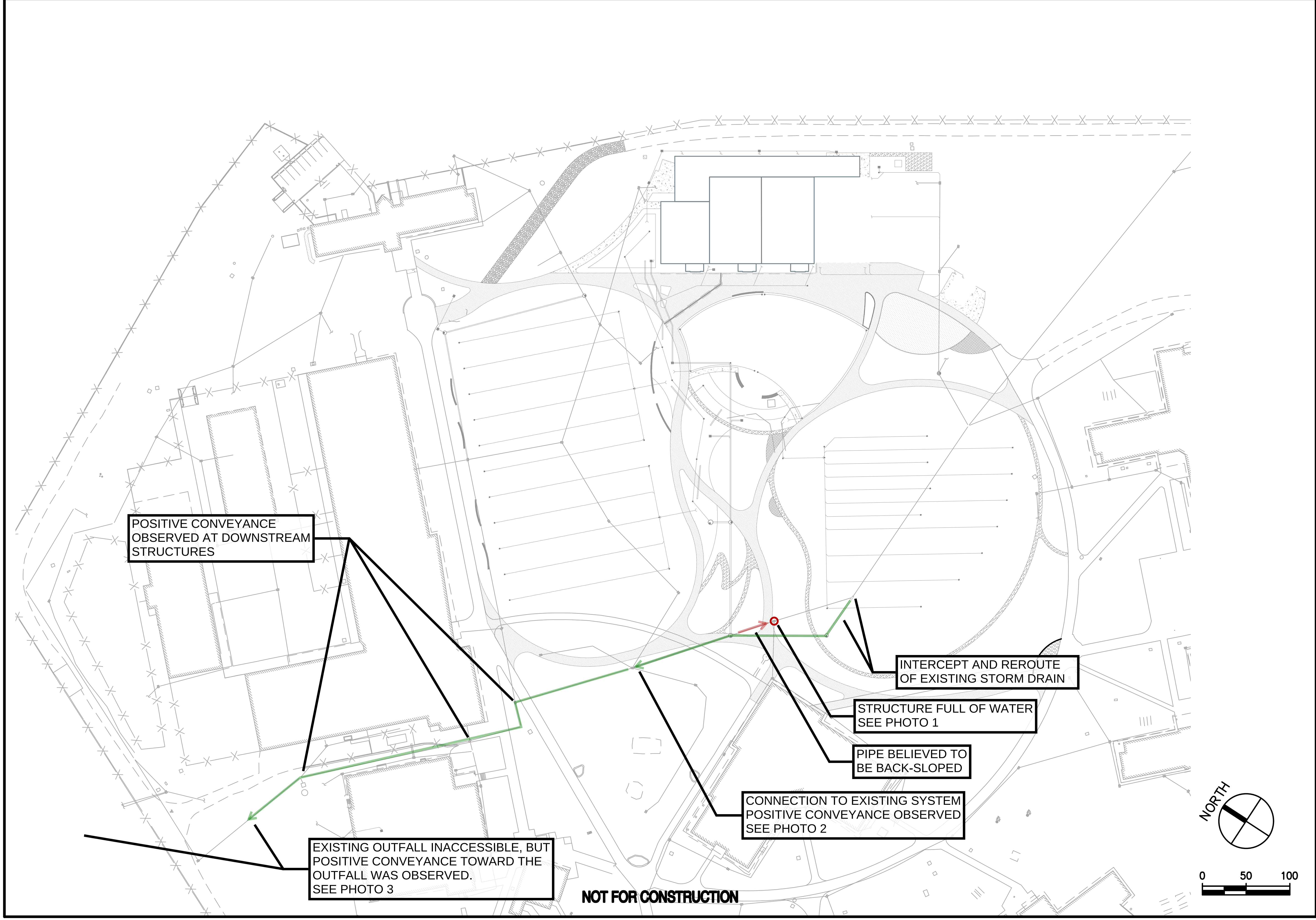

POSITIVE CONVEYANCE OBSERVED AT DOWNSTREAM STRUCTURES

INTERCEPT AND REROUTE OF EXISTING STORM DRAIN

STRUCTURE FULL OF WATER
SEE PHOTO 1

PIPE BELIEVED TO BE BACK-SLOPED

CONNECTION TO EXISTING SYSTEM
POSITIVE CONVEYANCE OBSERVED
SEE PHOTO 2

EXISTING OUTFALL INACCESSIBLE, BUT POSITIVE CONVEYANCE TOWARD THE OUTFALL WAS OBSERVED.
SEE PHOTO 3

NOT FOR CONSTRUCTION

kpff

DLR GROUP
GREEN HILL SCHOOL RECREATION BUILDING
CHEHALIS, WA

DRAWN BY: LRC
DATE: 2021-01-18

PHOTO 1

STRUCTURE FULL OF WATER
NO CONVEYANCE VISIBLE.

PHOTO 2

PHOTO 3